PRIVATE ENGINEER'S NOTICE TO CONTRACTOR

THE EXISTENCE AND LOCATION OF ANY UNDERGROUND UTILITY PIPES, CONDUITS OR STRUCTURES SHOWN ON THEESE PLANS ARE OBTAINED BY A SEARCH OF THE AVAILABLE RECORDS. TO THE BEST OF OUR KNOWLEDGE THERE ARE NO EXISTING UTILITIES EXCEPT AS SHOWN ON THESE PLANS. THE CONTRACTOR IS REQUIRED TO TAKE DUE PRECAUTIONARY MEASURES TO PROTECT THE UTILITY LINES SHOWN ON THESE DRAWINGS. THE CONTRACTOR FURTHER ASSUMES ALL LIABILITY AND RESPONSABILITY FOR THE UTILITY PIPES, CONDUITS OR STRUCTURES SHOWN OR NOT SHOWN ON THESE DRAWINGS. CONTRACTOR AGREES THAT HE SHALL ASUME FULL AND COMPLETE RESPONSABILITY FOR JOB SITE CONDITIONS DURING THE COURSE OF CONSTRUCTION OF THIS PROJECT, INCLUDING SAFETY OF ALL PERSONS AND PROPERTY; THAT THIS REQUIREMENT SHALL APPLY CONTINUOUSLY AND NOT BE LIMITED TO NORMAL WORKING HOURS; AND THAT THE CONTRACTOR SHALL DEFEND, INDEMNIFY AND HOLD THE COUNTY, THE OWNER, AND THE ENGINEER HARMLESS FROM ANY LIABILITY, REAL OR ALLEGED, IN CONNECTION WITH THE PERFORMANCE OF WORK FROM THE SOLE NEGLEGENCE OF THE OWNER OR THE ENGINEER.

SAN BERNARDINO COUNTY FLOOD CONTROL DISTRICT

TITLE SHEET
FOR CONSTRUCTION PLANS OF
WEST STATE STREET STORM DRAIN
CITY OF MONTCLAIR, CITY OF ONTARIO AND
THE UNICORPORATED AREA OF THE COUNTY OF SAN BERNARDINO
SEGMENT III B & C
BETWEEN CENTRAL AVENUE TO MOUNTAIN AVENUE

F01087

SAN ANTONIO CREEK SYSTEM

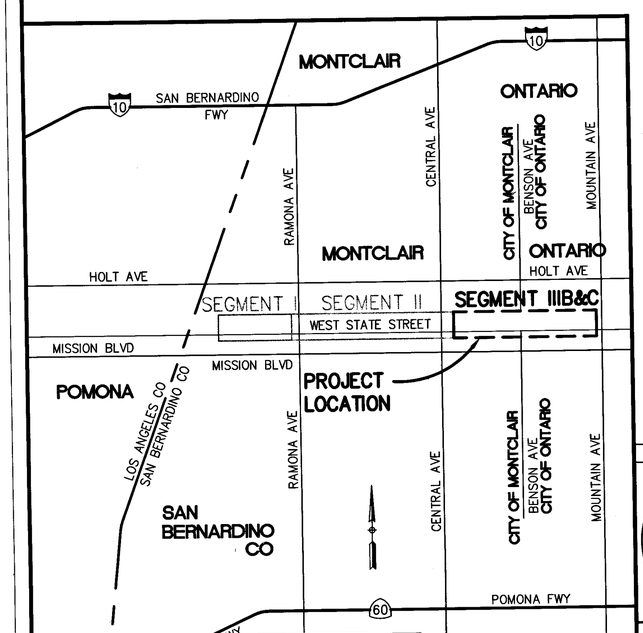

VICINITY MAP
NOT TO SCALE

SEAL

REGISTERED PROFESSIONAL ENGINEER
C 53589
Exp. 6-30-07
CIVIL
STATE OF CALIFORNIA

PREPARED BY
P&D Consultants, Inc.
999 Town & Country, Ste 400
Orange, CA 92868 (714) 835-4447
SIGNATURE 3/31/2004 DATE

1

SEGMENT III B

BETWEEN CENTRAL AVENUE TO MOUNTAIN AVENUE
26 SHEETS

2

SEGMENT III C

TRANSITION STRUCTURES AT BENSON AVENUE AND MOUNTAIN AVENUE
15 SHEETS

APPROVED BY: Patrick J. Mead 4/6/04
FLOOD CONTROL ENGINEER R.C.E. 24903 DATE

BENCH MARK
B.M. 701-12, Fd 2" BRASS DISC STAMPED "701-12"
IN TOP OF CURB, SOUTH SIDE OF STATE ST. 121' +
WEST OF CHANNEL AVE. PER CSFB 4013/830 ELEV = 956.91'

CITY OF ONTARIO

RECOMMENDED BY Louis Abi-Jaoude 8-19-04
ASSISTANT CITY ENGINEER DATE

ACCEPTED BY John P. Sullivan 8-23-04
CITY ENGINEER DATE

E:\RP01\CTS\WSSD\PH-C\MUTTI-III\BC.dwg 3/31/2004 12:40:42 PM

PRIVATE ENGINEER'S NOTICE TO CONTRACTOR

THE EXISTENCE AND LOCATION OF ANY UNDERGROUND UTILITY PIPES, CONDUITS OR STRUCTURES SHOWN ON THEESE PLANS ARE OBTAINED BY A SEARCH OF THE AVAILABLE RECORDS. TO THE BEST OF OUR KNOWLEDGE THERE ARE NO EXISTING UTILITIES EXCEPT AS SHOWN ON THESE PLANS. THE CONTRACTOR IS REQUIRED TO TAKE DUE PRECAUTIONARY MEASURES TO PROTECT THE UTILITY LINES SHOWN ON THESE DRAWINGS. THE CONTRACTOR FURTHER ASSUMES ALL LIABILITY AND RESPONSABILITY FOR THE UTILITY PIPES, CONDUITS OR STRUCTURES SHOWN OR NOT SHOWN ON THESE DRAWINGS. CONTRACTOR AGREES THAT HE SHALL ASUME FULL AND COMPLETE RESPONSABILITY FOR JOB SITE CONDITIONS DURING THE COURSE OF CONSTRUCTION OF THIS PROJECT, INCLUDING SAFETY OF ALL PERSONS AND PROPERTY; THAT THIS REQUIREMENT SHALL APPLY CONTINUOUSLY AND NOT BE LIMITED TO NORMAL WORKING HOURS; AND THAT THE CONTRACTOR SHALL DEFEND, INDEMNIFY AND HOLD THE COUNTY, THE OWNER, AND THE ENGINEER HARMLESS FROM ANY LIABILITY, REAL OR ALLEGED, IN CONNECTION WITH THE PERFORMANCE OF WORK FROM THE SOLE NEGLEGENCE OF THE OWNER OR THE ENGINEER.

SAN BERNARDINO COUNTY FLOOD CONTROL DISTRICT

PLANS FOR RECONSTRUCTION

ON

WEST STATE STREET STORM DRAIN

SEGMENT IIIB

BETWEEN CENTRAL AVENUE TO MOUNTAIN AVENUE

F01087

SAN ANTONIO CREEK SYSTEM

INDEX OF SHEETS

TITLE SHEET	1
PLAN & PROFILE	2–7
STREET LATERALS	8
STREET PLAN & PROFILE	9–10
STRUCTURAL SECTIONS	11–13
GRAND AVENUE CULVERT	14–16
BENSON AVENUE CULVERT	17–19
TRAFFIC CONTROL	20–21
STANDARD DETAILS	22–25
14" WATER RELOCATION	26

DISPOSITION NOTES

1. PROTECT EXISTING IMPROVEMENT IN PLACE.
2. REMOVE EXISTING IMPROVEMENT.
3. RELOCATE EXISTING IMPROVEMENT AS DIRECTED.
4. IMPROVEMENT RELOCATED BY OTHERS, PROTECT NEW IMPROVEMENT IN PLACE.
5. ABANDON ITEM IN PLACE.
6. SEE JACKING PLANS FOR IMPROVEMENT.
7. SEE TRAFFIC CONTROL DRAWING.
8. ADJUST TO GRADE.

CONSTRUCTION NOTES

1. CONSTRUCT 10.5' W/2 BY 10' H NORTHERLY RC RECTANGULAR CHANNEL PER DETAILS ON SHT 12. HEIGHT AND LIMITS PER PROFILE.
2. CONSTRUCT 10.5' W/2 BY VARYING H (10' TO 12') SOUTHERLY RC RECTANGULAR CHANNEL PER DETAILS ON SHT 13. HEIGHT AND LIMITS PER PROFILE.
3. CONSTRUCT 8' W/2 BY VARYING H (9' TO 10') NORTHERLY RC RECTANGULAR CHANNEL PER DETAILS ON SHT 12. HEIGHT AND LIMITS PER PROFILE.
4. CONSTRUCT STREET INLET PER DETAIL ON SHT 8.
5. RELOCATE SIGN TO BARRIER/CHANNEL WALL PER SIGN DETAIL ON SHEET 9 OR AS DIRECTED BY ENGINEER.
6. CONSTRUCT JUNCTION STRUCTURE PER APWA STD. PLAN 333-0 ON SHT. 22
7. REMOVE INTERFERING PORTION OF 8" RESERVOIR OUTLET AND REINSTALL FLAPGATE.
8. CONSTRUCT 0.40' OF TYPE A, 3/4" MAXIMUM, MEDIUM ASPHALT CONCRETE OVER 0.55' OF CLASS 2 AGGREGATE BASE.
9. CONSTRUCT 8' W/2 BY VARYING H (10' TO 12') SOUTHERLY RC RECTANGULAR CHANNEL PER DETAILS ON SHT 13. HEIGHT AND LIMITS PER PROFILE.
10. CONSTRUCT FENCE PER SPEC I & II SHT'S 24 & 25.
11. CONSTRUCT CONCRETE BARRIER TYPE 50D PER STATE STD PLAN A75A.
12. COLD PLANE 3 FOOT WIDTH 0.15' MINIMUM DEPTH.
13. CONSTRUCT GATE PER SPEC. I & II, SHEETS 24 & 25
14. CONSTRUCT RECESS LADDER PER DETAILS ON SHT. 23
15. CONSTRUCT MODIFIED CONCRETE BARRIER PER DETAIL ON SHT. 22

NOTE:
FINAL PAY QUANTITY FOR BAR REINFORCING STEEL FOR SEGMENT III B = 1,148,059 LBS. THIS QUANTITY IS EXCLUSIVE OF ANY AND ALL BAR REINFORCING STEEL THAT IS INVOLVED IN THE COMPONENTS OF WORK, IDENTIFIED ON THE DRAWINGS OR THE SPECIAL PROVISIONS, FOR WHICH PAYMENT IS BEING MADE UNDER SEPERATE CONTRACT ITEMS.

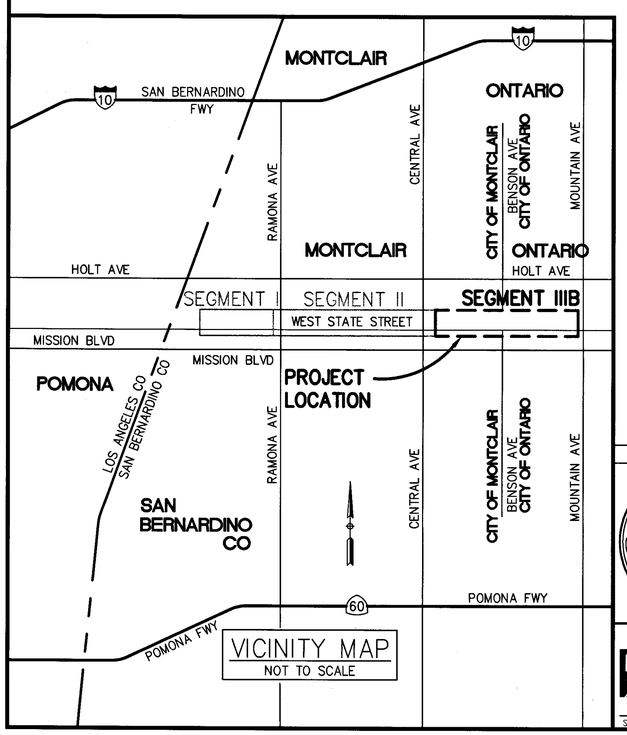

VICINITY MAP
NOT TO SCALE

SEAL

REGISTERED PROFESSIONAL ENGINEER
RONALD K. RIDLEY-JOHNSON
C 53589
Exp. 6-30-03
CIVIL
STATE OF CALIFORNIA

PREPARED BY
P&D Consultants, Inc.
999 Town & Country, Ste 400
Orange, CA 92868 (714) 835-4447
SIGNATURE 3/31/2004 DATE

APPROVED BY: Patrick J. Mead 4/6/04
FLOOD CONTROL ENGINEER R.C.E. 24903 DATE

BENCH MARK
B.M. 701-12, Fd 2" BRASS DISC STAMPED "701-12" IN TOP OF CURB, SOUTH SIDE OF STATE ST. 121' + WEST OF CHANNEL AVE. PER CSFB 4013/830 ELEV = 956.91'

CITY OF ONTARIO

RECOMMENDED BY Louis Abi-Jaoude 8-19-04
ASSISTANT CITY ENGINEER DATE

ACCEPTED BY John P. Sellua 8-23-04
CITY ENGINEER DATE

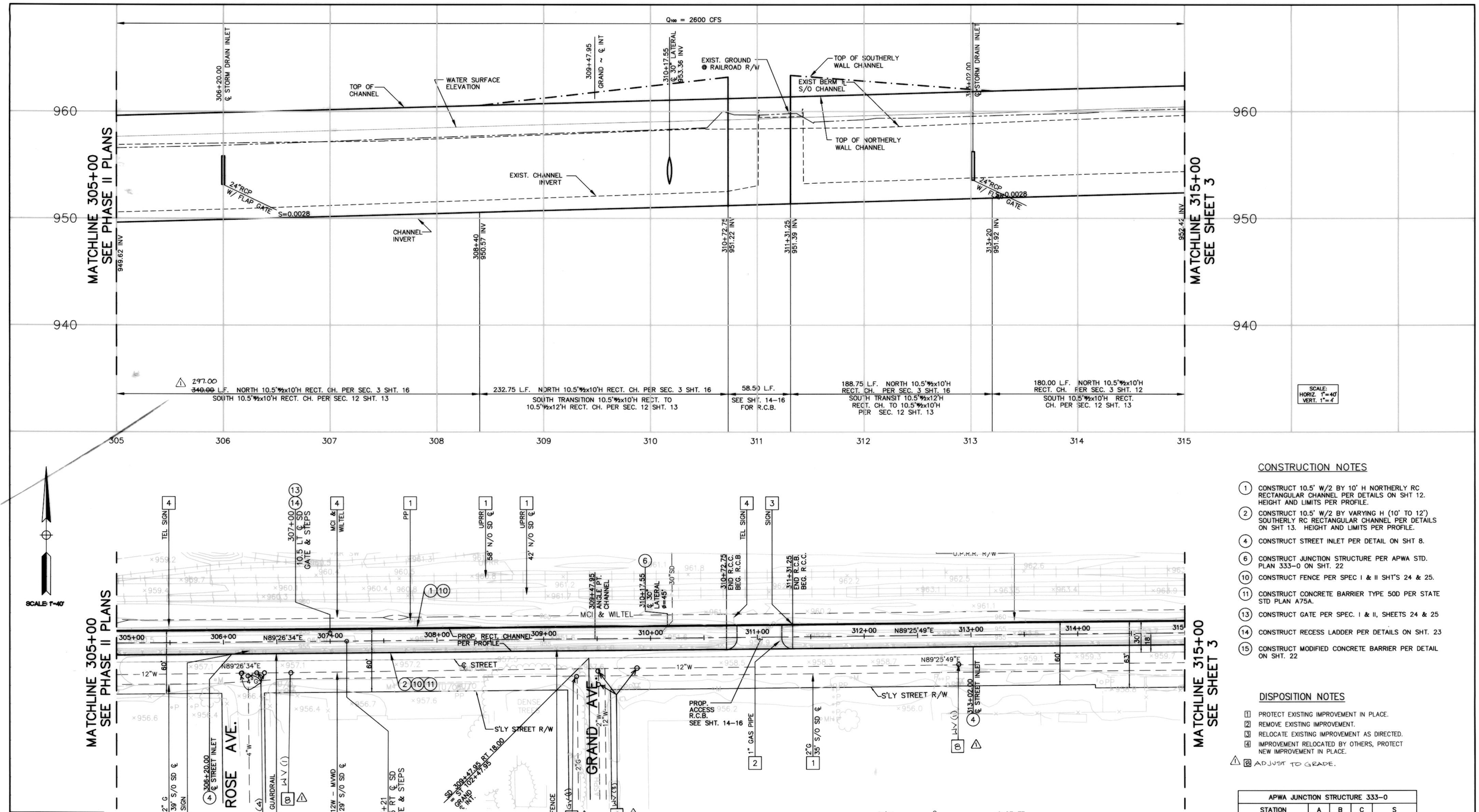

CONSTRUCTION NOTES

1. CONSTRUCT 10.5' W/2 BY 10' H NORTHERLY RC RECTANGULAR CHANNEL PER DETAILS ON SHT 12. HEIGHT AND LIMITS PER PROFILE.
2. CONSTRUCT 10.5' W/2 BY VARYING H (10' TO 12') SOUTHERLY RC RECTANGULAR CHANNEL PER DETAILS ON SHT 13. HEIGHT AND LIMITS PER PROFILE.
4. CONSTRUCT STREET INLET PER DETAIL ON SHT 8.
6. CONSTRUCT JUNCTION STRUCTURE PER APWA STD. PLAN 333–0 ON SHT. 22
10. CONSTRUCT FENCE PER SPEC I & II SHT'S 24 & 25.
11. CONSTRUCT CONCRETE BARRIER TYPE 50D PER STATE STD PLAN A75A.
13. CONSTRUCT GATE PER SPEC. I & II, SHEETS 24 & 25
14. CONSTRUCT RECESS LADDER PER DETAILS ON SHT. 23
15. CONSTRUCT MODIFIED CONCRETE BARRIER PER DETAIL ON SHT. 22

DISPOSITION NOTES

1. PROTECT EXISTING IMPROVEMENT IN PLACE.
2. REMOVE EXISTING IMPROVEMENT.
3. RELOCATE EXISTING IMPROVEMENT AS DIRECTED.
4. IMPROVEMENT RELOCATED BY OTHERS, PROTECT NEW IMPROVEMENT IN PLACE.

1 8 ADJUST TO GRADE.

APWA JUNCTION STRUCTURE 333–0				
STATION	A	B	C	S
310+17.55	45	30	3'	953.36

SEE SHEET 25

SEAL

REGISTERED PROFESSIONAL ENGINEER RONALD K. RICHARDSON C 53589 Exp. 6-30-07 CIVIL STATE OF CALIFORNIA

P&D Consultants, Inc.
999 Town & Country, Fourth Floor
Orange, CA 92868 (714) 835-4447

SIGNATURE Ronald K. Richardson DATE 2/27/2004

REVISIONS			
MARK	DATE	DESCRIPTION	BY
1	5/20/04	ADDED GV, LV & REVISED LF VALUE	AG

PROJECT ENGR.	DRAWN BY:	DESIGNED BY:
RKR	RKR	RKR

SUBMITTED BY: James Barcelt 4/5/04 CHIEF, ENGINEERING DIVISION
RECOMMENDED BY: Jim R. Olen 4/5/04 ASSIST. FLOOD CONTROL ENGINEER
APPROVED BY: 4/6/04 Robert J. Mead FLOOD CONTROL ENGINEER

SAN BERNARDINO COUNTY FLOOD CONTROL DISTRICT

SAN ANTONIO CREEK SYSTEM

WEST STATE STREET STORM DRAIN

PLAN&PROFILE

STA. 305+00 TO STA. 315+00

DATE	SCALE	FILE NO.	DRWG. NO.
02/2004	1"=40'	1–112–	2 of 26

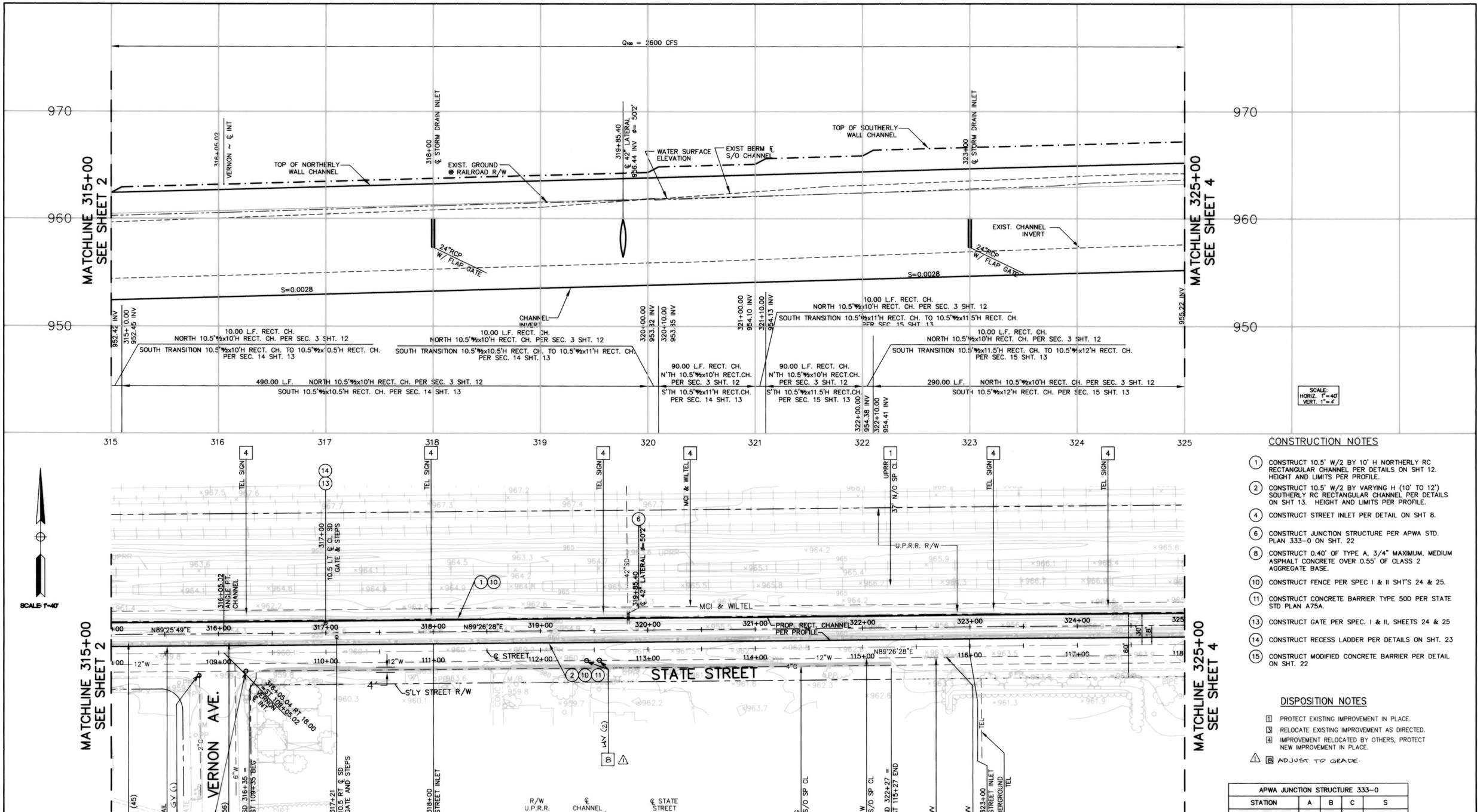

CONSTRUCTION NOTES

1. CONSTRUCT 10.5' W/2 BY 10' H NORTHERLY RC RECTANGULAR CHANNEL PER DETAILS ON SHT 12. HEIGHT AND LIMITS PER PROFILE.
2. CONSTRUCT 10.5' W/2 BY VARYING H (10' TO 12') SOUTHERLY RC RECTANGULAR CHANNEL PER DETAILS ON SHT 13. HEIGHT AND LIMITS PER PROFILE.
4. CONSTRUCT STREET INLET PER DETAIL ON SHT 8.
6. CONSTRUCT JUNCTION STRUCTURE PER APWA STD. PLAN 333-0 ON SHT. 22
8. CONSTRUCT 0.40' OF TYPE A, 3/4" MAXIMUM, MEDIUM ASPHALT CONCRETE OVER 0.55' OF CLASS 2 AGGREGATE BASE.
10. CONSTRUCT FENCE PER SPEC I & II SHT'S 24 & 25.
11. CONSTRUCT CONCRETE BARRIER TYPE 50D PER STATE STD PLAN A75A.
13. CONSTRUCT GATE PER SPEC. I & II, SHEETS 24 & 25
14. CONSTRUCT RECESS LADDER PER DETAILS ON SHT. 23
15. CONSTRUCT MODIFIED CONCRETE BARRIER PER DETAIL ON SHT. 22

DISPOSITION NOTES

1. PROTECT EXISTING IMPROVEMENT IN PLACE.
3. RELOCATE EXISTING IMPROVEMENT AS DIRECTED.
4. IMPROVEMENT RELOCATED BY OTHERS, PROTECT NEW IMPROVEMENT IN PLACE.

⚠ 8 ADJUST TO GRADE.

APWA JUNCTION STRUCTURE 333-0				
STATION	A	B	C	S
319+85.40	50'2"	42"	3'	956.49

SEAL

REGISTERED PROFESSIONAL ENGINEER
RONALD K. RICHARDSON
C 53589
Exp. 6-30-07
CIVIL
STATE OF CALIFORNIA

P&D Consultants, Inc.
999 Town & Country, Fourth Floor
Orange, CA 92868 (714) 835-4447
SIGNATURE
2/27/2004
DATE

REVISIONS			
MARK	DATE	DESCRIPTION	BY
⚠	5/20/04	ADDED GV, WV & DISP. NOTE.	A.G.

PROJECT ENGR.	DRAWN BY:	DESIGNED BY:
RKR	RKR	RKR

SUBMITTED BY: CHIEF, ENGINEERING DIVISION
RECOMMENDED BY: ASSIST. FLOOD CONTROL ENGINEER 4/5/04
APPROVED BY: 4/6/04 FLOOD CONTROL ENGINEER

SAN BERNARDINO COUNTY FLOOD CONTROL DISTRICT

SAN ANTONIO CREEK SYSTEM

WEST STATE STREET STORM DRAIN

PLAN & PROFILE

STA. 315+00 TO STA. 325+00

DATE	SCALE	FILE NO.	DRWG. NO.
02/2004	1"=40'	1-112-	3 of 26

F:\PROJECTS\NSSD\1-112\SHEET 3.DWG Mar 2, 2004 4:49:57 PM

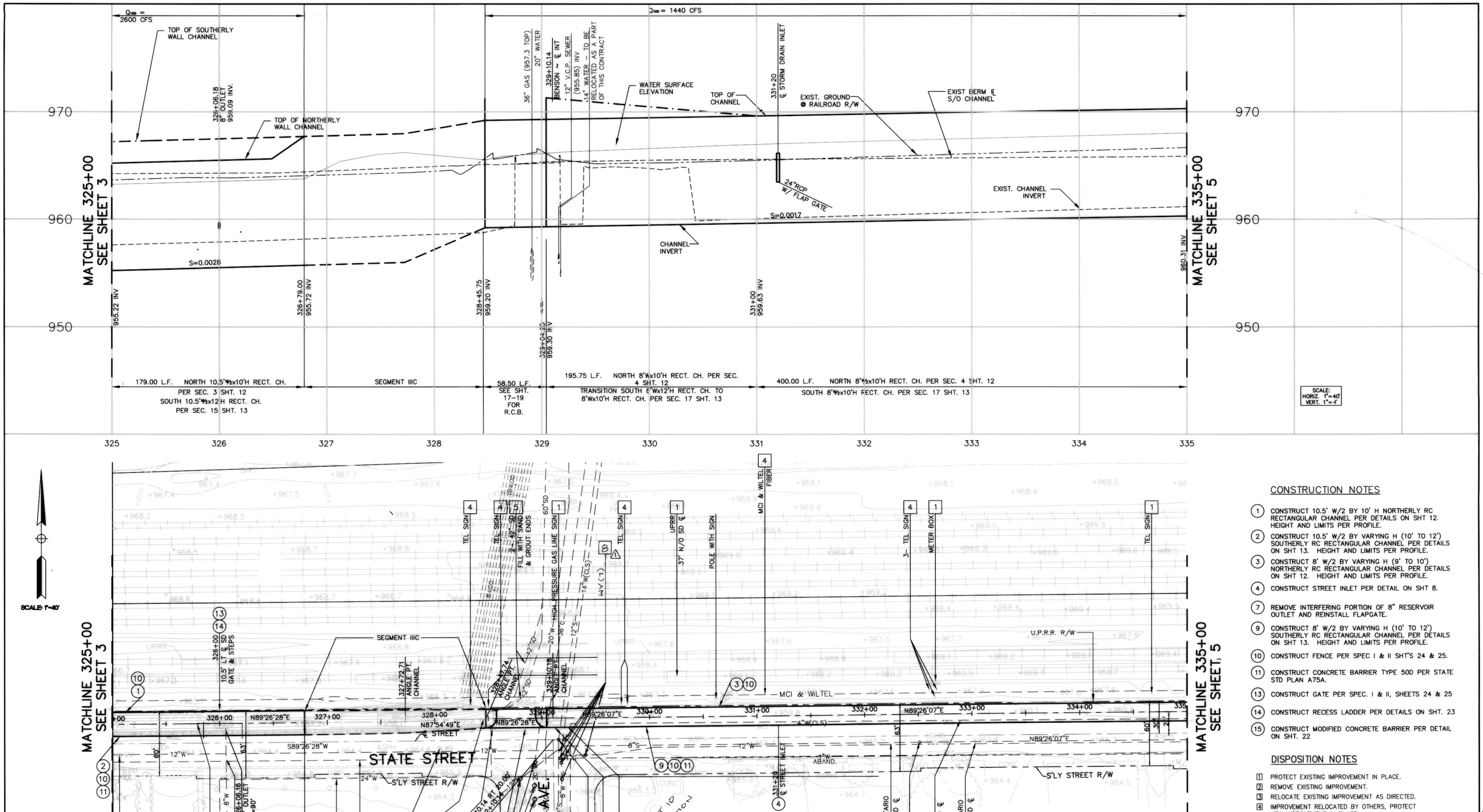

CONSTRUCTION NOTES

1. CONSTRUCT 10.5' W/2 BY 10' H NORTHERLY RC RECTANGULAR CHANNEL PER DETAILS ON SHT 12. HEIGHT AND LIMITS PER PROFILE.
2. CONSTRUCT 10.5' W/2 BY VARYING H (10' TO 12') SOUTHERLY RC RECTANGULAR CHANNEL PER DETAILS ON SHT 13. HEIGHT AND LIMITS PER PROFILE.
3. CONSTRUCT 8' W/2 BY VARYING H (9' TO 10') NORTHERLY RC RECTANGULAR CHANNEL PER DETAILS ON SHT 12. HEIGHT AND LIMITS PER PROFILE.
4. CONSTRUCT STREET INLET PER DETAIL ON SHT 8.
7. REMOVE INTERFERING PORTION OF 8" RESERVOIR OUTLET AND REINSTALL FLAPGATE.
9. CONSTRUCT 8' W/2 BY VARYING H (10' TO 12') SOUTHERLY RC RECTANGULAR CHANNEL PER DETAILS ON SHT 13. HEIGHT AND LIMITS PER PROFILE.
10. CONSTRUCT FENCE PER SPEC I & II SHT'S 24 & 25.
11. CONSTRUCT CONCRETE BARRIER TYPE 50D PER STATE STD PLAN A75A.
13. CONSTRUCT GATE PER SPEC. I & II, SHEETS 24 & 25
14. CONSTRUCT RECESS LADDER PER DETAILS ON SHT. 23
15. CONSTRUCT MODIFIED CONCRETE BARRIER PER DETAIL ON SHT. 22

DISPOSITION NOTES

1. PROTECT EXISTING IMPROVEMENT IN PLACE.
2. REMOVE EXISTING IMPROVEMENT.
3. RELOCATE EXISTING IMPROVEMENT AS DIRECTED.
4. IMPROVEMENT RELOCATED BY OTHERS, PROTECT NEW IMPROVEMENT IN PLACE.
5. ABANDON ITEM IN PLACE.
8. ADJUST TO GRADE.

SEAL

REGISTERED PROFESSIONAL ENGINEER — RONALD K. RICHARDSON — C 53589 — Exp. 6-30-07 — CIVIL — STATE OF CALIFORNIA

P&D Consultants, Inc.
999 Town & Country, Fourth Floor
Orange, CA 92868 (714) 835-4447

SIGNATURE — DATE 3/3/2004

REVISIONS			
MARK	DATE	DESCRIPTION	BY
1	5/20/04	ADDED WV & REF. NOTE	A.G.

PROJECT ENGR.	DRAWN BY:	DESIGNED BY:
RKR	RKR	RKR

SUBMITTED BY: James Borcuk 4/5/04 — CHIEF, ENGINEERING DIVISION
RECOMMENDED BY: James R. Olem 4/5/04 — ASSIST. FLOOD CONTROL ENGINEER
APPROVED BY: 4/6/04 Patrick J. Mead — FLOOD CONTROL ENGINEER

SAN BERNARDINO COUNTY FLOOD CONTROL DISTRICT

SAN ANTONIO CREEK SYSTEM

WEST STATE STREET STORM DRAIN

PLAN & PROFILE

STA. 325+00 TO STA. 335+00

DATE	SCALE	FILE NO.	DRWG. NO.
02/2004	1"=40'	1-112-	4 of 26

F:\PROJECTS\WSSD\PH-C2\MSht1.dwg, 3/31/2004 11:55:42 AM

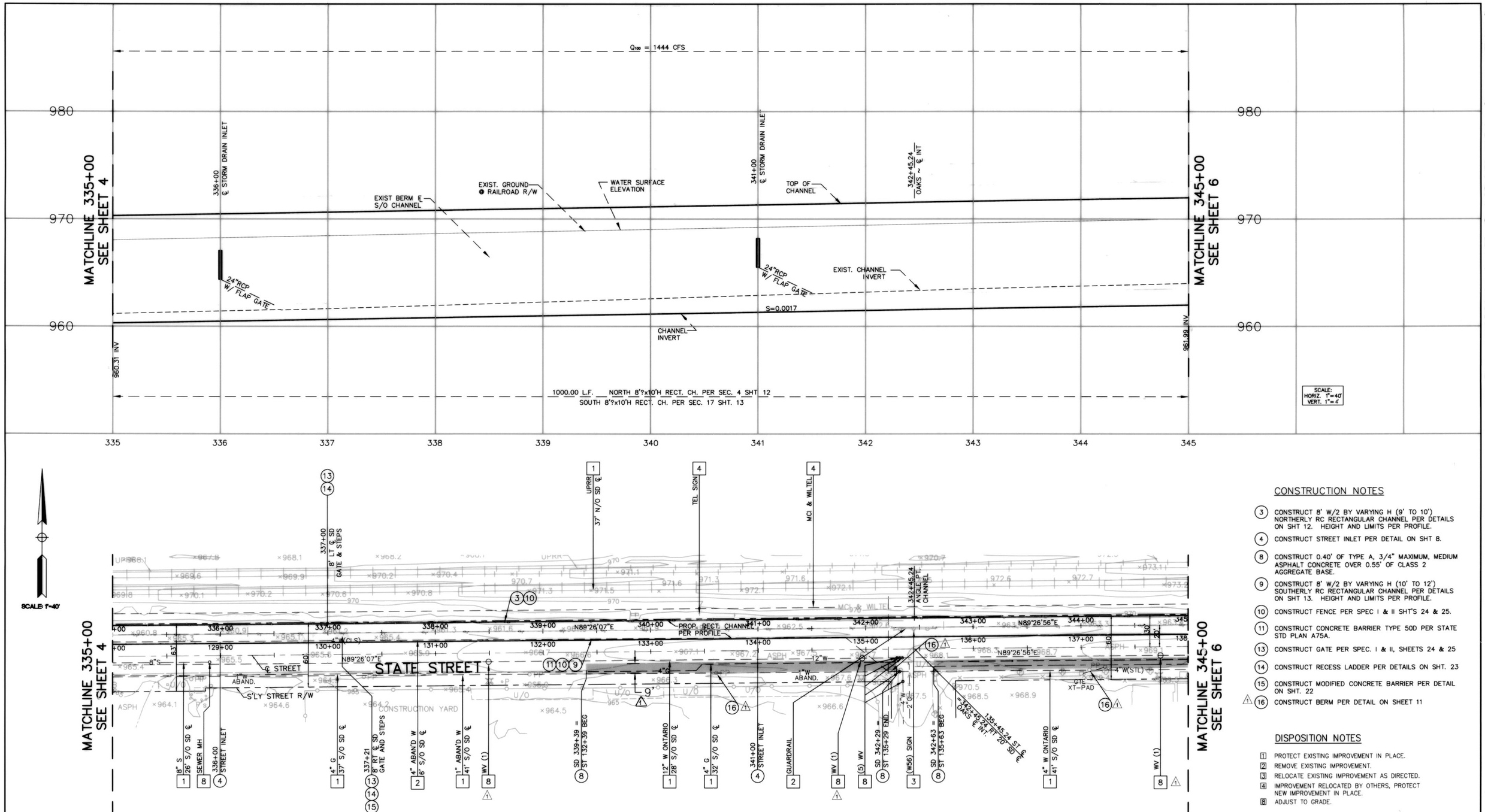

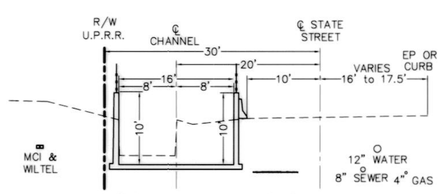

TYPICAL CHANNEL SECTION

STATION 335+00.00 TO 345+00.00

SCALE: 1"=10'

CONSTRUCTION NOTES

3. CONSTRUCT 8' W/2 BY VARYING H (9' TO 10') NORTHERLY RC RECTANGULAR CHANNEL PER DETAILS ON SHT 12. HEIGHT AND LIMITS PER PROFILE.
4. CONSTRUCT STREET INLET PER DETAIL ON SHT 8.
8. CONSTRUCT 0.40' OF TYPE A, 3/4" MAXIMUM, MEDIUM ASPHALT CONCRETE OVER 0.55' OF CLASS 2 AGGREGATE BASE.
9. CONSTRUCT 8' W/2 BY VARYING H (10' TO 12') SOUTHERLY RC RECTANGULAR CHANNEL PER DETAILS ON SHT 13. HEIGHT AND LIMITS PER PROFILE.
10. CONSTRUCT FENCE PER SPEC I & II SHT'S 24 & 25.
11. CONSTRUCT CONCRETE BARRIER TYPE 50D PER STATE STD PLAN A75A.
13. CONSTRUCT GATE PER SPEC. I & II, SHEETS 24 & 25
14. CONSTRUCT RECESS LADDER PER DETAILS ON SHT. 23
15. CONSTRUCT MODIFIED CONCRETE BARRIER PER DETAIL ON SHT. 22
16. CONSTRUCT BERM PER DETAIL ON SHEET 11

DISPOSITION NOTES

1. PROTECT EXISTING IMPROVEMENT IN PLACE.
2. REMOVE EXISTING IMPROVEMENT.
3. RELOCATE EXISTING IMPROVEMENT AS DIRECTED.
4. IMPROVEMENT RELOCATED BY OTHERS, PROTECT NEW IMPROVEMENT IN PLACE.
8. ADJUST TO GRADE.

SEAL

REGISTERED PROFESSIONAL ENGINEER RONALD K. RICHARDSON C 53589 Exp. 6-30-03 CIVIL STATE OF CALIFORNIA

PREPARED BY

P&D Consultants, Inc.
999 Town & Country, Fourth Floor
Orange, CA 92868 (714) 835-4447

SIGNATURE: Ronald K Richardson DATE: 9/2/2004

REVISIONS			
MARK	DATE	DESCRIPTION	BY
1	7/20/04	ADDED WV & CONST. NOTE	AG

PROJECT ENGR.	DRAWN BY:	DESIGNED BY:
RKR	RKR	RKR

SUBMITTED BY: 4/5/04 James Borcuk, CHIEF, ENGINEERING DIVISION

RECOMMENDED BY: 4/5/04 Vance R. Olson, ASSIST. FLOOD CONTROL ENGINEER

APPROVED BY: 4/6/04 Patrick J. Mead, FLOOD CONTROL ENGINEER

SAN BERNARDINO COUNTY FLOOD CONTROL DISTRICT

SAN ANTONIO CREEK SYSTEM

WEST STATE STREET STORM DRAIN

PLAN&PROFILE

STA. 335+00 TO STA. 345+00

DATE	SCALE	FILE NO.	DRWG. NO.
02/2004	1"=40'	1-112-	5 of 26

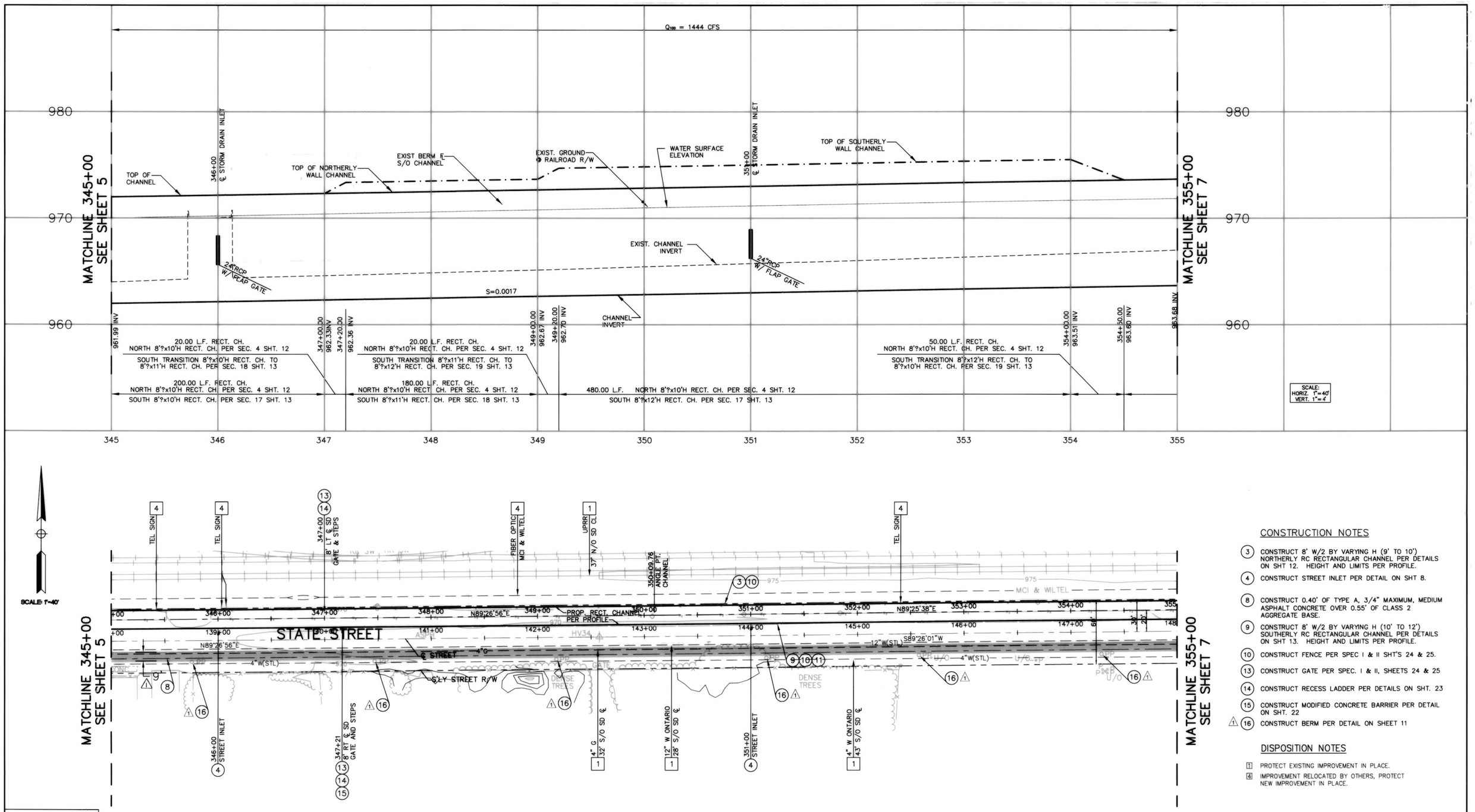

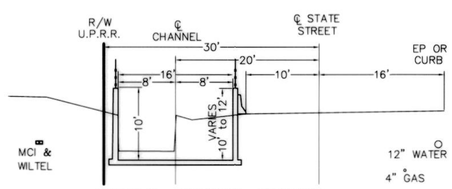

TYPICAL CHANNEL SECTION

STATION 345+00.00 TO 355+00.00

SCALE: 1"=10'

CONSTRUCTION NOTES

(3) CONSTRUCT 8' W/2 BY VARYING H (9' TO 10') NORTHERLY RC RECTANGULAR CHANNEL PER DETAILS ON SHT 12. HEIGHT AND LIMITS PER PROFILE.

(4) CONSTRUCT STREET INLET PER DETAIL ON SHT 8.

(8) CONSTRUCT 0.40' OF TYPE A, 3/4" MAXIMUM, MEDIUM ASPHALT CONCRETE OVER 0.55' OF CLASS 2 AGGREGATE BASE.

(9) CONSTRUCT 8' W/2 BY VARYING H (10' TO 12') SOUTHERLY RC RECTANGULAR CHANNEL PER DETAILS ON SHT 13. HEIGHT AND LIMITS PER PROFILE.

(10) CONSTRUCT FENCE PER SPEC I & II SHT'S 24 & 25.

(13) CONSTRUCT GATE PER SPEC. I & II, SHEETS 24 & 25

(14) CONSTRUCT RECESS LADDER PER DETAILS ON SHT. 23

(15) CONSTRUCT MODIFIED CONCRETE BARRIER PER DETAIL ON SHT. 22

(1)(16) CONSTRUCT BERM PER DETAIL ON SHEET 11

DISPOSITION NOTES

[1] PROTECT EXISTING IMPROVEMENT IN PLACE.

[4] IMPROVEMENT RELOCATED BY OTHERS, PROTECT NEW IMPROVEMENT IN PLACE.

SEAL

REGISTERED PROFESSIONAL ENGINEER
RONALD K. RICHARDSON
C 53589
Exp. 6-30-07
CIVIL
STATE OF CALIFORNIA

P&D Consultants, Inc.
999 Town & Country, Fourth Floor
Orange, CA 92868 (714) 835-4447

SIGNATURE DATE 9/2/2004

REVISIONS			
MARK	DATE	DESCRIPTION	BY
1	7/20/04	ADDED WV & CONST. NOTE	AG

PROJECT ENGR.	DRAWN BY:	DESIGNED BY:
RKR	RKR	RKR

SUBMITTED BY: 4/5/04 James Bennett CHIEF, ENGINEERING DIVISION

RECOMMENDED BY: 4/5/04 Vincent Ono ASSIST. FLOOD CONTROL ENGINEER

APPROVED BY: 4/4/04 Patricia J. Mead FLOOD CONTROL ADMINISTRATOR

SAN BERNARDINO COUNTY FLOOD CONTROL DISTRICT

SAN ANTONIO CREEK SYSTEM

WEST STATE STREET STORM DRAIN

PLAN&PROFILE

STA. 345+00 TO STA. 355+00

DATE	SCALE	FILE NO.	DRWG. NO.
02/2004	1"=40'	1-112-	6of26

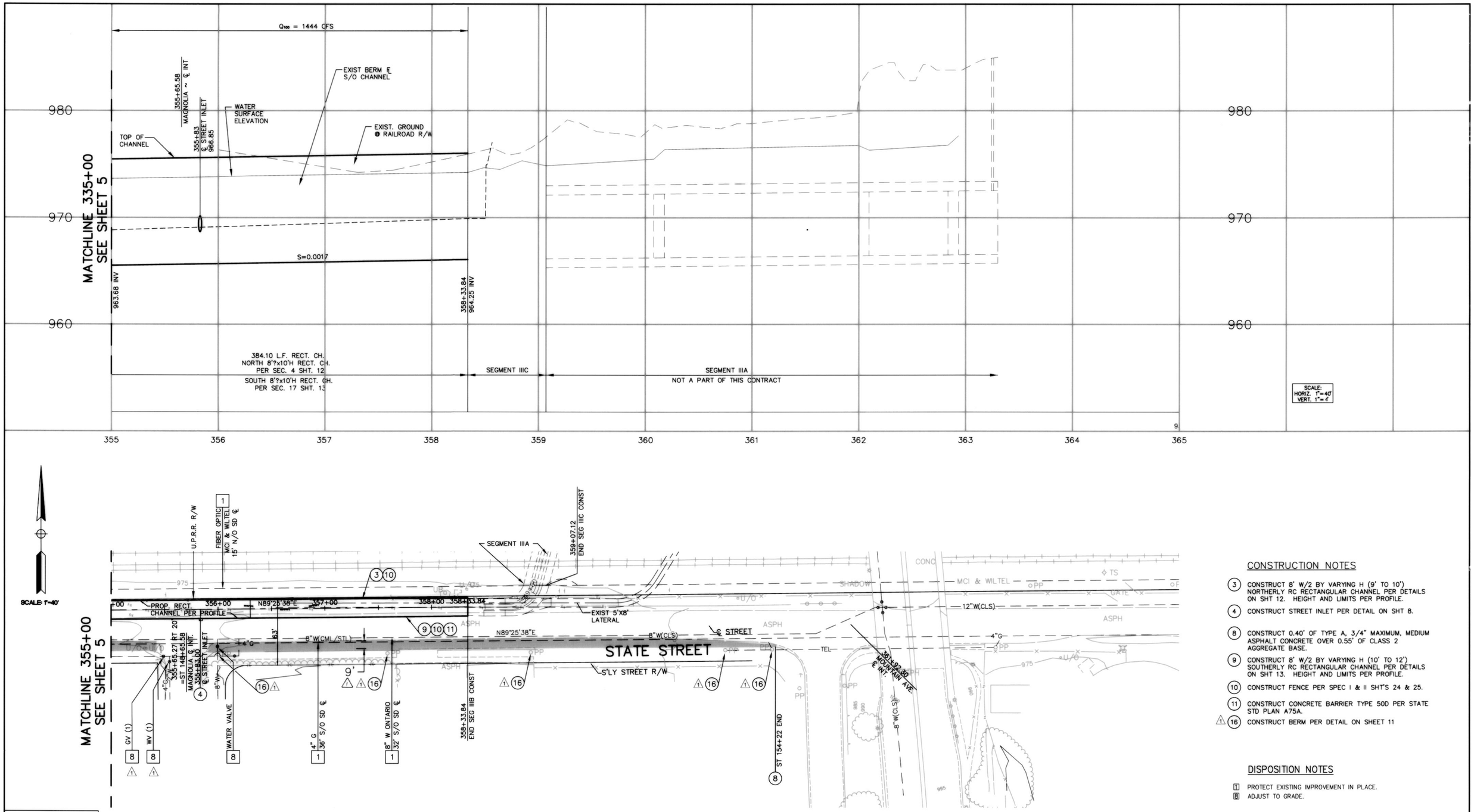

CONSTRUCTION NOTES

(3) CONSTRUCT 8' W/2 BY VARYING H (9' TO 10') NORTHERLY RC RECTANGULAR CHANNEL PER DETAILS ON SHT 12. HEIGHT AND LIMITS PER PROFILE.

(4) CONSTRUCT STREET INLET PER DETAIL ON SHT 8.

(8) CONSTRUCT 0.40' OF TYPE A, 3/4" MAXIMUM, MEDIUM ASPHALT CONCRETE OVER 0.55' OF CLASS 2 AGGREGATE BASE.

(9) CONSTRUCT 8' W/2 BY VARYING H (10' TO 12') SOUTHERLY RC RECTANGULAR CHANNEL PER DETAILS ON SHT 13. HEIGHT AND LIMITS PER PROFILE.

(10) CONSTRUCT FENCE PER SPEC I & II SHT'S 24 & 25.

(11) CONSTRUCT CONCRETE BARRIER TYPE 50D PER STATE STD PLAN A75A.

(1)(16) CONSTRUCT BERM PER DETAIL ON SHEET 11

DISPOSITION NOTES

[1] PROTECT EXISTING IMPROVEMENT IN PLACE.
[8] ADJUST TO GRADE.

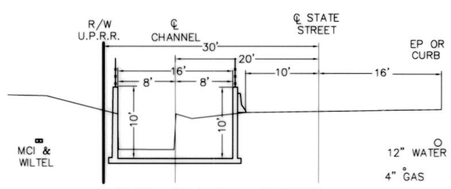

TYPICAL CHANNEL SECTION
STATION 355+00.00 TO 358+33.84
SCALE: 1"=10'

SEAL

REGISTERED PROFESSIONAL ENGINEER
RANDOLL K. RICHARDSON
C 53589
Exp. 6-30-07
CIVIL
STATE OF CALIFORNIA

P&D Consultants, Inc.
999 Town & Country, Fourth Floor
Orange, CA 92868 (714) 835-4447
SIGNATURE
9/2/2004
DATE

REVISIONS			
MARK	DATE	DESCRIPTION	BY
1	7/20/04	ADDED WV, GV, CONST. NOTE	AG

PROJECT ENGR.	DRAWN BY:	DESIGNED BY:
RKR	RKR	RKR

SUBMITTED BY: 4/5/04 — CHIEF, ENGINEERING DIVISION
RECOMMENDED BY: 4/5/04 — ASSIST. FLOOD CONTROL ENGINEER
APPROVED BY: 4/6/04 — FLOOD CONTROL ENGINEER

SAN BERNARDINO COUNTY FLOOD CONTROL DISTRICT

SAN ANTONIO CREEK SYSTEM

WEST STATE STREET STORM DRAIN

PLAN&PROFILE

STA. 345+00 TO STA. 355+00

DATE	SCALE	FILE NO.	DRWG. NO.
02/2004	1"=40'	1-112-	7of26

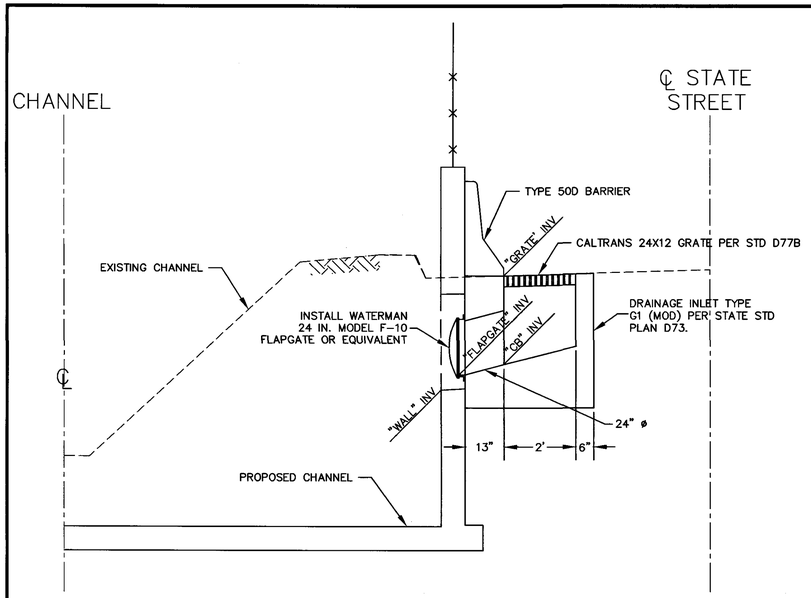

STREET DRAINAGE INLET DETAIL

SCALE: 1"=2'

GRATE INLET TYPE G1 PER STATE STD PLAN D73

		ELEVATION			
STATION	H =	GRATE	CB	FLAPGATE	WALL
306+20	3.0	957.10	954.10	953.85	953.43
313+02	3.0	959.01	956.01	955.76	955.34
318+00	3.0	960.80	957.80	957.55	957.13
323+00	3.0	963.54	960.54	960.29	959.87
331+20	3.0	965.60	962.60	962.35	961.93
336+00	3.0	965.96	962.96	962.71	962.29
341+00	3.0	967.66	964.66	964.41	963.99
346+00	3.0	970.08	967.08	966.83	966.41
351+00	3.0	971.95	968.95	968.70	968.28
355+83	3.0	969.60	966.60	966.35	965.93

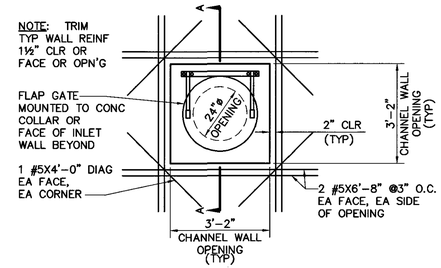

ELEVATION VIEW
NOT TO SCALE

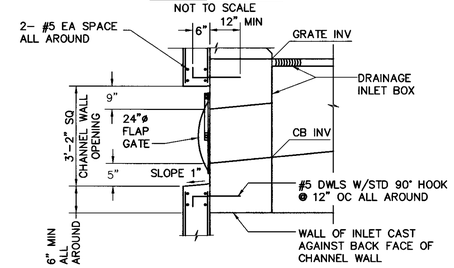

SECTION A-A
NOT TO SCALE

CONSTRUCTION NOTES

(8) CONSTRUCT 0.60' OF TYPE A, 3/4" MAXIMUM COARSE, ASPHALT CONCRETE OVER 0.95' OF CLASS 2 AGGREGATE BASE.

(12) COLD PLANE 3 FOOT WIDTH 0.15' MINIMUM DEPTH.

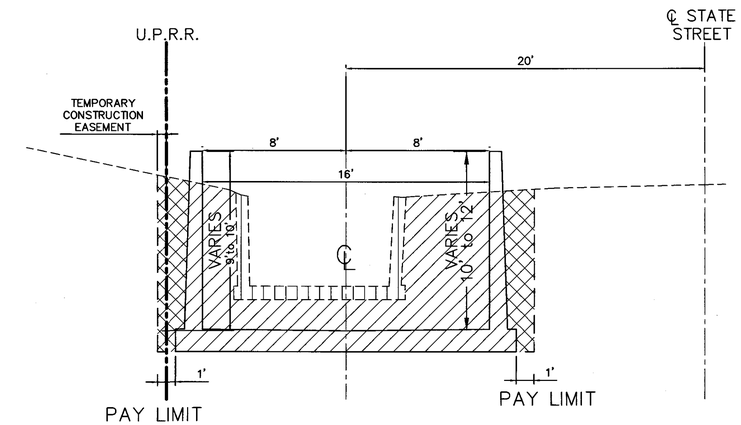

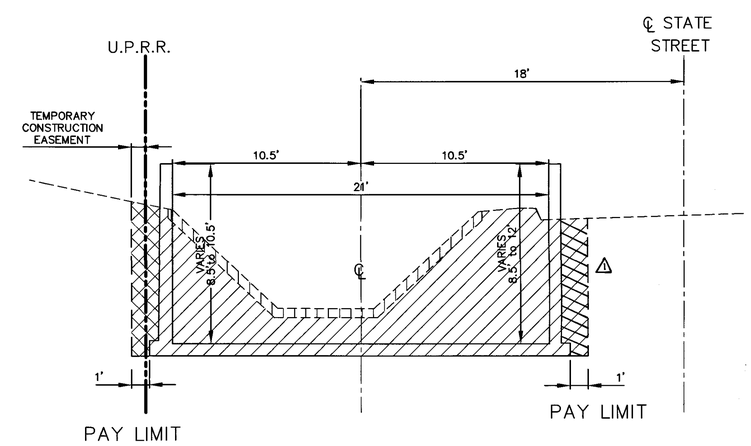

EXCAVATION & BACKFILL

NOT TO SCALE

CHANNEL EXCAVATION
CHANNEL BACKFILL (95% COMPACTION)
CHANNEL DEMOLITION

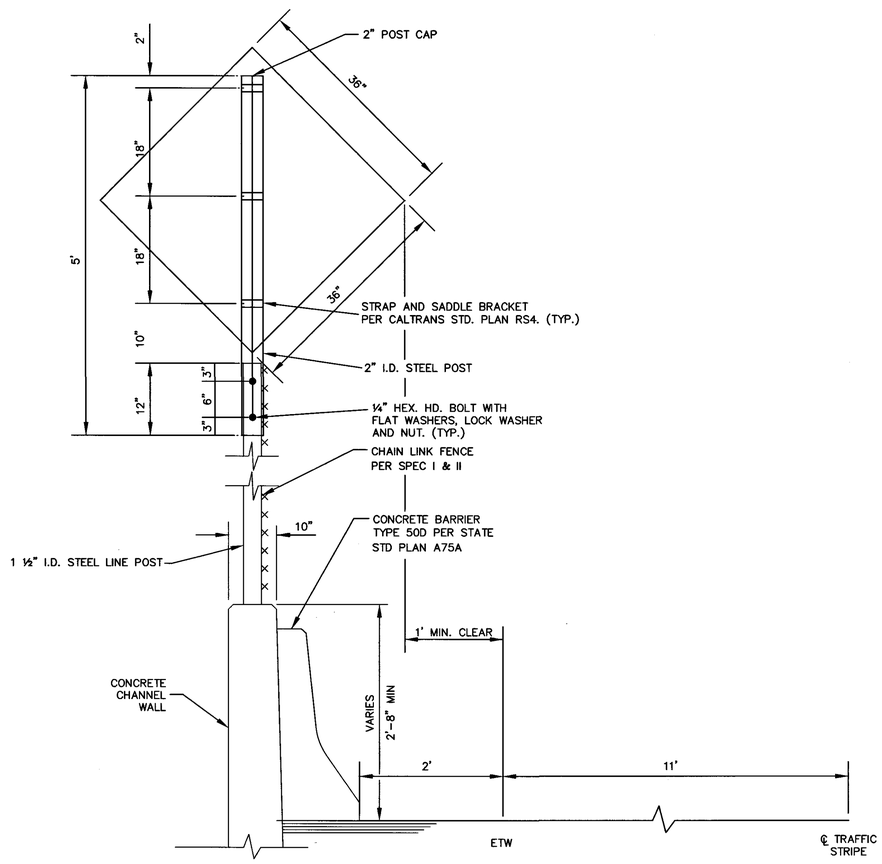

SIGN DETAIL

ROADSIDE TRAFFIC SIGN
NOT TO SCALE

NOTE: SEE SHEET 17 FOR STRUCTURAL NOTES.

SEAL

REGISTERED PROFESSIONAL ENGINEER — RONALD K. RICHARDSON — C 53589 — Exp. 6-30-07 — CIVIL — STATE OF CALIFORNIA

P&D Consultants, Inc.
999 Town & Country, Fourth Floor
Orange, CA 92868 (714) 835-4447
SIGNATURE — DATE 2/27/2004

REVISIONS			
MARK	DATE	DESCRIPTION	BY
1	5/18/04	ADDED HATCHING	A.G.

PROJECT ENGR.	DRAWN BY:	DESIGNED BY:
RKR	RKR	RKR

SUBMITTED BY: James Barcus 4/5/04 — CHIEF, ENGINEERING DIVISION
RECOMMENDED BY: Dave R. Olson 4/5/04 — ASSIST. FLOOD CONTROL ENGINEER
APPROVED BY: Patrick J. Mead 4/6/04 — FLOOD CONTROL ENGINEER

SAN BERNARDINO COUNTY FLOOD CONTROL DISTRICT

SAN ANTONIO CREEK SYSTEM
WEST STATE STREET STORM DRAIN
STREET DRAINAGE INLET, SIGN, EXCAVATION/BACKFILL

DATE	SCALE	FILE NO.	DRWG. NO.
02/2004		1-112-	8of26

F:\PROJECTS\WSS\DPH-C2\MFLAP\C2M.dwg, 2/27/2004 10:30:19 AM

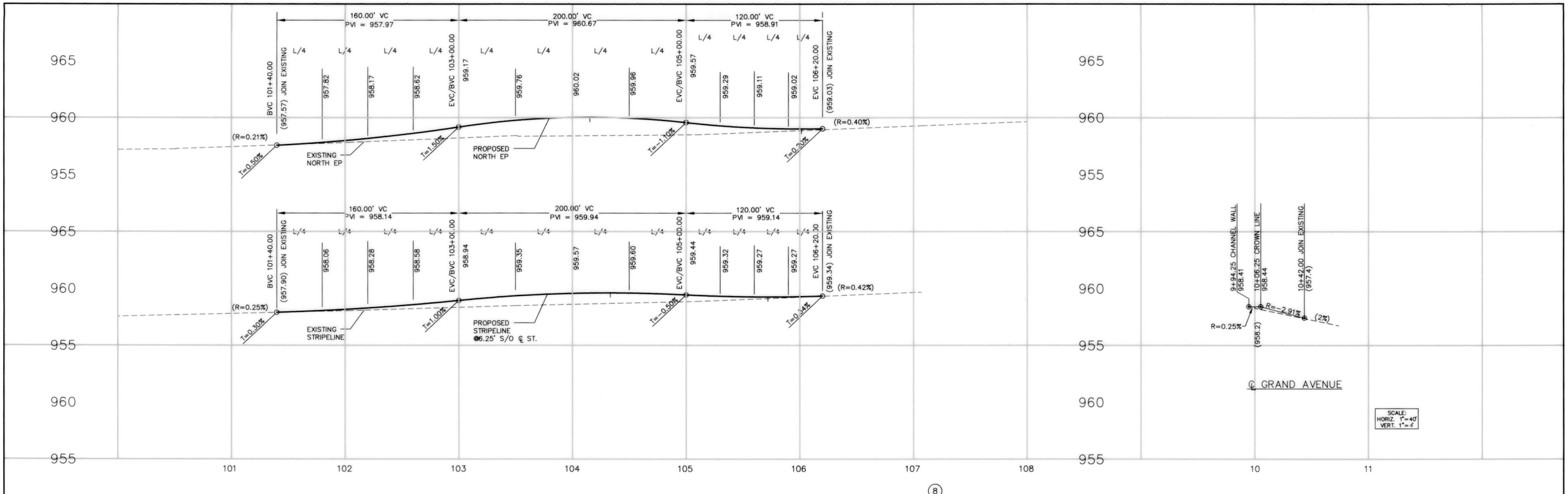

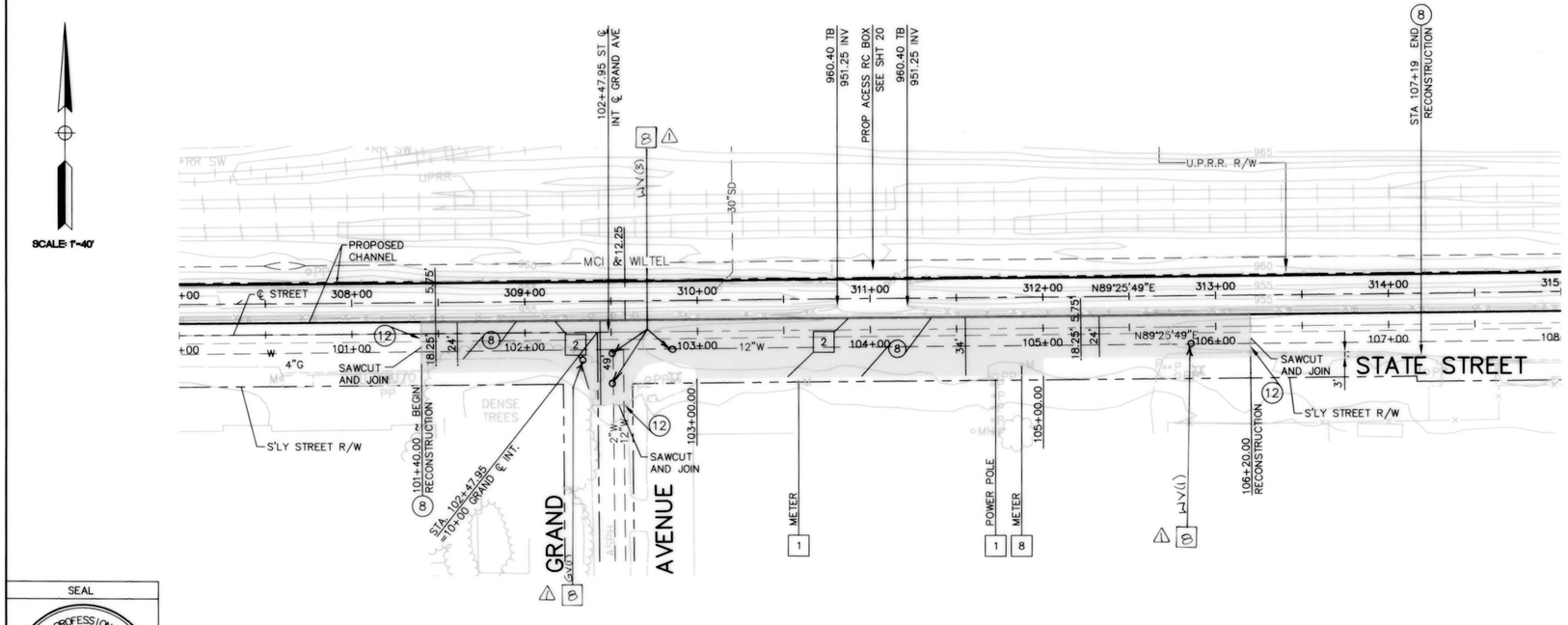

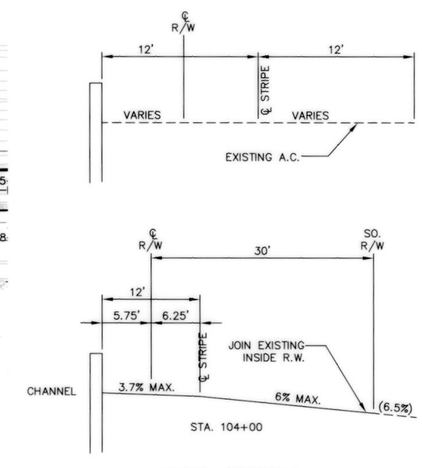

CROSS SECTIONS
NOT TO SCALE

CONSTRUCTION NOTES

(8) CONSTRUCT ~~0.40' OF TYPE A, 3/4"~~ 0.15' OF TYPE A, 1/2" MAXIMUM, MEDIUM ASPHALT CONCRETE OVER ~~0.55'~~ 0.25' OF CLASS 2 AGGREGATE BASE.

(12) COLD PLANE 3 FOOT WIDTH 0.15' MINIMUM DEPTH.

DISPOSITION NOTES

1. PROTECT EXISTING IMPROVEMENT IN PLACE.
2. REMOVE EXISTING IMPROVEMENT.
8. ADJUST TO GRADE.

SEAL

REGISTERED PROFESSIONAL ENGINEER
RONALD K. RICHARDSON
C 53589
Exp. 6-30-07
CIVIL
STATE OF CALIFORNIA

P&D Consultants, Inc.
999 Town & Country, Fourth Floor
Orange, CA 92868 (714) 835-4447

Ronald K Richardson
SIGNATURE

2/27/2004
DATE

REVISIONS			
MARK	DATE	DESCRIPTION	BY
1	5/25/04	ADDED GV & HV REV'D. CONST NOTE 8	AG

PROJECT ENGR.	DRAWN BY:	DESIGNED BY:
RKR	RKR	RKR

SUBMITTED BY: 4/5/04 James Borcuk, CHIEF, ENGINEERING DIVISION

RECOMMENDED BY: 4/5/04 Diana R. Olson, ASSIST. FLOOD CONTROL ENGINEER

APPROVED BY: 4/6/04 Patrick J. Mead, FLOOD CONTROL ENGINEER

SAN BERNARDINO COUNTY FLOOD CONTROL DISTRICT

SAN ANTONIO CREEK SYSTEM

WEST STATE STREET STORM DRAIN

STREET RECONSTRUCTION

STA. 101+40 TO STA. 106+20

DATE	SCALE	FILE NO.	DRWG. NO.
02/2004	1"=40'	1-112-	9of26

F:\PROJECTS\WSSD\PH-C2M\STREET1.dwg, 2/27/2004 10:18:42 AM

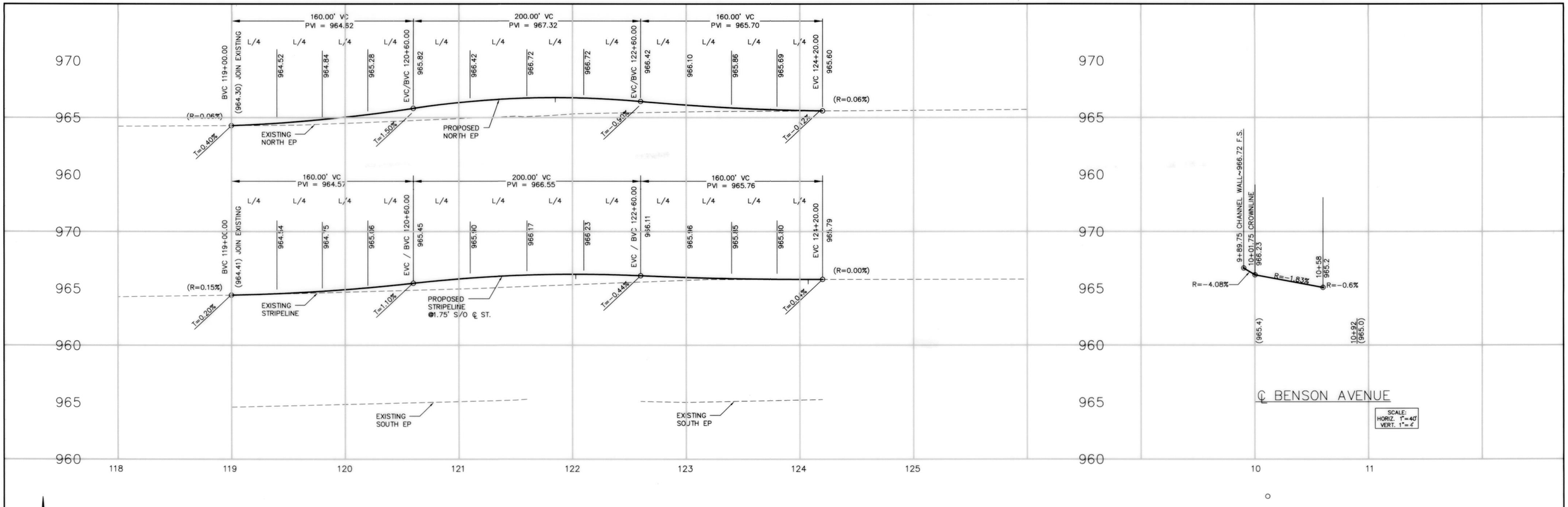

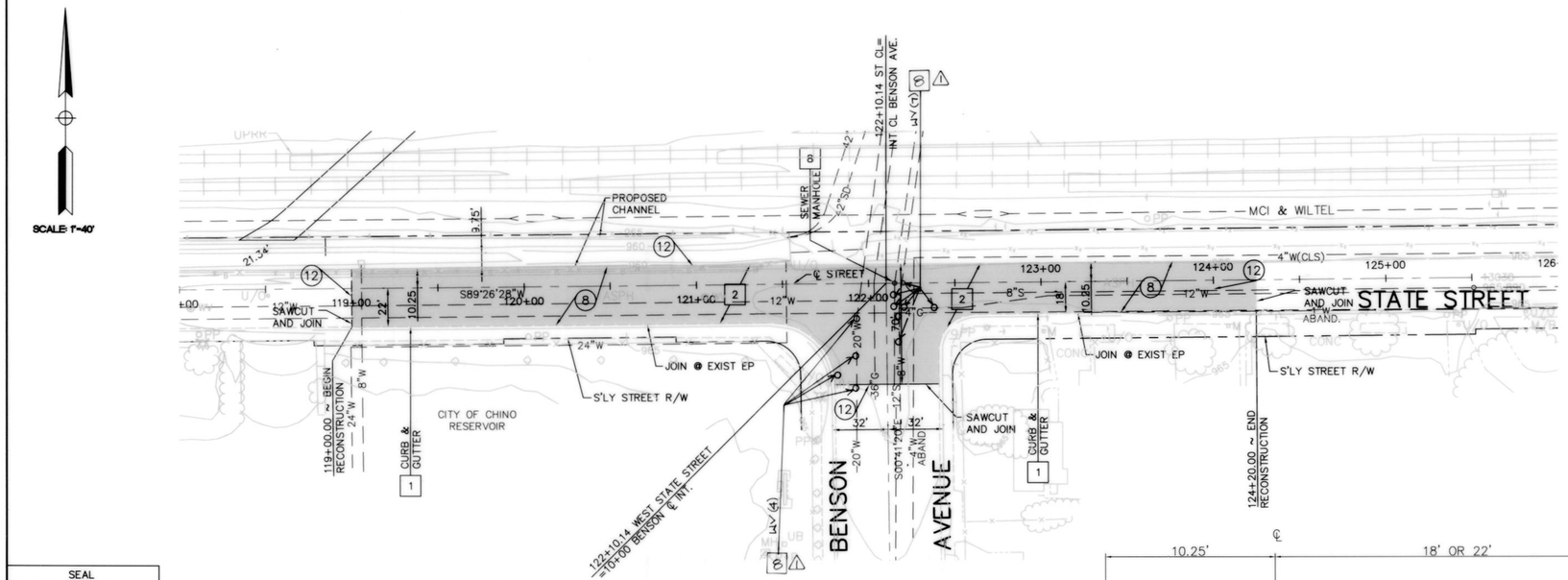

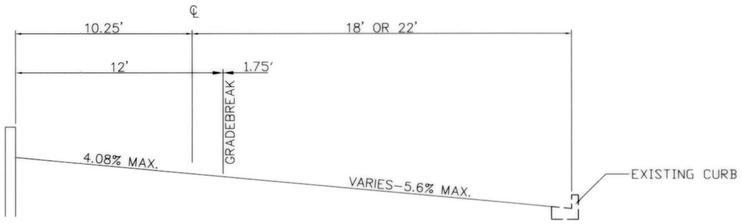

TYPICAL SECTION
NOT TO SCALE

CONSTRUCTION NOTES

(8) CONSTRUCT ~~0.40'~~ 0.15' OF TYPE A, ~~3/4"~~ 1/2" MAXIMUM, MEDIUM ASPHALT CONCRETE OVER ~~0.55'~~ 0.25' OF CLASS 2 AGGREGATE BASE.

(12) COLD PLANE 3 FOOT WIDTH 0.15' MINIMUM DEPTH.

DISPOSITION NOTES

1. PROTECT EXISTING IMPROVEMENT IN PLACE.
2. REMOVE EXISTING IMPROVEMENT.
8. ADJUST TO GRADE.

SEAL

REGISTERED PROFESSIONAL ENGINEER
RONALD K. RICHARDSON
C 53589
Exp. 6-30-07
CIVIL
STATE OF CALIFORNIA

P&D Consultants, Inc.
999 Town & Country, Fourth Floor
Orange, CA 92868 (714) 835-4447

SIGNATURE 2/27/2004 DATE

REVISIONS			
MARK	DATE	DESCRIPTION	BY
1	5/25/04	ADDED WV AND REV'D. CONST NOTE 8	A.G.

PROJECT ENGR.	DRAWN BY:	DESIGNED BY:
RKR	RKR	RKR

SUBMITTED BY: 4/5/04 James Borcuts CHIEF, ENGINEERING DIVISION

RECOMMENDED BY: Vanessa Alon 4/5/04 ASSIST. FLOOD CONTROL ENGINEER

APPROVED BY: 4/6/04 Patrick J. Mead FLOOD CONTROL ENGINEER

SAN BERNARDINO COUNTY FLOOD CONTROL DISTRICT

SAN ANTONIO CREEK SYSTEM

WEST STATE STREET STORM DRAIN

STREET RECONSTRUCTION

STA. 119+00 TO STA. 124+20

DATE	SCALE	FILE NO.	DRWG. NO.
02/2004	1"=40'	1-112-	10of26

F:\PROJECTS\WSSD\PH-C2M\STREET2.dwg, 2/27/2004 10:20:46 AM

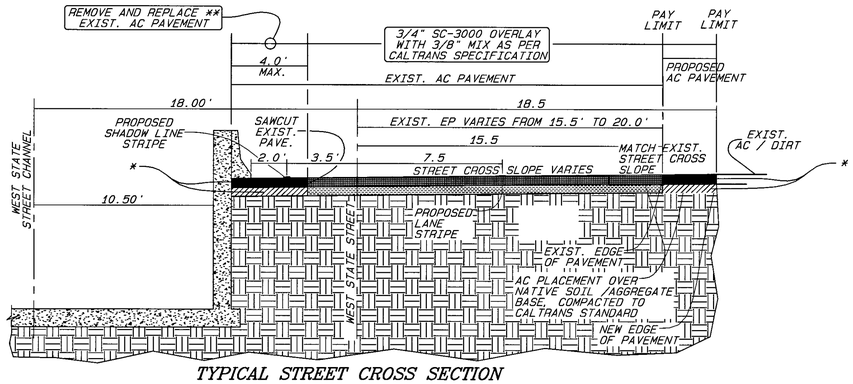

TYPICAL STREET CROSS SECTION

STREET STA 109+35 TO STA 115+27
STREET STA 132+39 TO STA 135+29
STREET STA 135+63 TO STA 154+22

LEGEND
- 0.40' AC
- 0.55' AGGREGATE BASE

* PLACE 0.40' OF TYPE 'A', 1/2" MAXIMUM, COURSE ASPHALT CONCRETE OVER 0.55' OF CLASS 2 AGGREGATE BASE.
** MAXIMUM PAY LIMIT FOR EXISTING PAVEMENT REMOVAL AND REPLACEMENT.

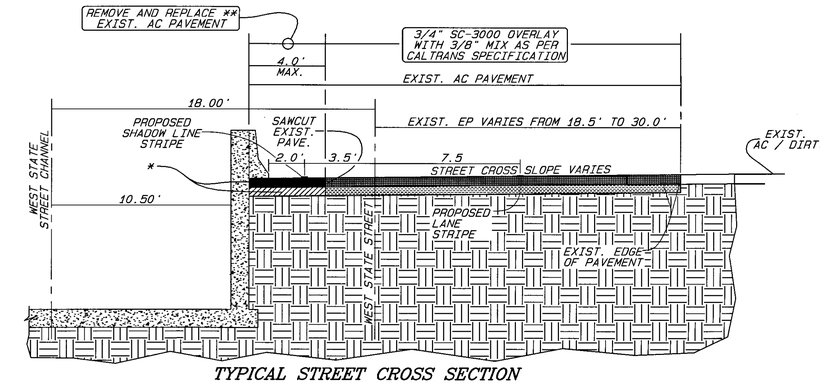

TYPICAL STREET CROSS SECTION

STREET STA 98+00 TO STA 101+40
STREET STA 106+20 TO STA 109+35
STREET STA 115+27 TO STA 119+00
STREET STA 124+20 TO STA 132+39

LEGEND
- 0.40' AC
- 0.55' AGGREGATE BASE

* PLACE 0.40' OF TYPE 'A', 1/2" MAXIMUM, COURSE ASPHALT CONCRETE OVER 0.55' OF CLASS 2 AGGREGATE BASE.
** MAXIMUM PAY LIMIT FOR EXISTING PAVEMENT REMOVAL AND REPLACEMENT.

POWER POLE STREET STATION LOCATION	BERM LENGTH
133+61	15'
135+22	15'
137+08	15'
138+75	15'
140+46	15'
142+17	15'
144+15	15'
145+57	15'
147+29	15'
149+06	15'
150+58	15'
151+92	15'
153+75	15'
154+19	15'
TOTAL	210'

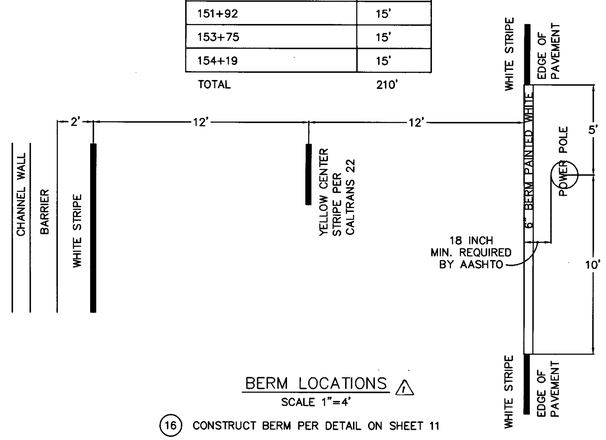

BERM LOCATIONS ⚠

SCALE 1"=4'

(16) CONSTRUCT BERM PER DETAIL ON SHEET 11

NOTES:
1. STRIPING TO BE CONTINOUS FOR THE ENTIRE LENGTH OF THE PROJECT, FROM STATION 305+00 TO 359+50.
2. WHITE STRIPE PER CALTRANS STD PLAN A20B DETAIL 27B.
3. CENTER STRIPE PER CALTRANS STD PLAN A20A DETAIL 22.
4. BERM PER CITY OF ONTARIO STD PLAN 116.

NOTES

1. EXTEND BARS B4, B5, B6, B7, B8, & B9 INTO KEWAY AS SHOWN.
2. REVISE VERTICAL LENGTHS OF B4, B5, & B6 BARS = ORIGINAL LENGTH + 1.5'
3. REVISE HORIZONTAL LENGTHS OF B4, B5, & B6 BARS =0.
4. REVISE VERTICAL LENGTHS OF B7, B8, & B9 BARS = TS + 1.0' (ORIGINAL LENGTHS BEING ZERO)
5. NO CHANGE IN THE HORIZONTAL LENGTHS OF B7, B8, & B9 BARS.
6. NO CHANGE IN B1, B2, & B3 BARS.
7. STEEL CLEARANCE; SAME AS PER PLANS.
8. DETAIL NOT APPLICALBE TO THE DIVERSION STRUCTURE AREA.
9. TK IS BASED ON TW & BATTER PER PLANS.
10. DETAIL SUBJECT TO UPRR REVIEW & APPROVAL.

(*) THICKNESS PER PLANS

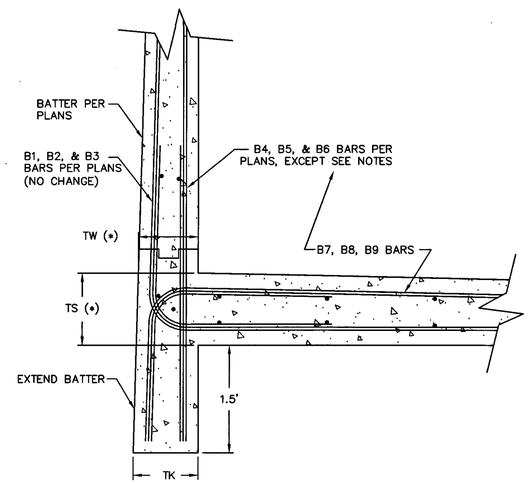

ALTERNATIVE PARTIAL "L" WALL SECTION ON SOUTHERLY SIDE (STREET SIDE LOOKING U/S) N.T.S.

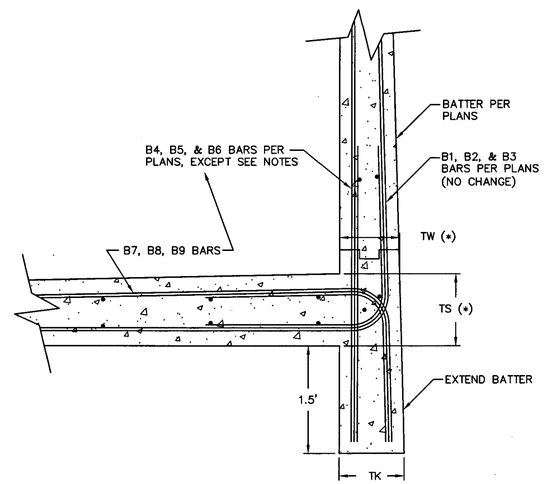

ALTERNATIVE PARTIAL "L" WALL SECTION ON NORTHERLY SIDE (STREET SIDE LOOKING U/S) N.T.S.

SEAL

REGISTERED PROFESSIONAL ENGINEER
RONALD K. RICHARDSON
C 53589
Exp. 6-30-07
CIVIL
STATE OF CALIFORNIA

PREPARED BY
P&D Consultants, Inc.
999 Town & Country, Fourth Floor
Orange, CA 92868 (714) 835-4447
SIGNATURE DATE 9/2/2004

REVISIONS			
MARK	DATE	DESCRIPTION	BY
1	7/20/04	REV. WALL SECTION TITLE	AG

PROJECT ENGR. RKR | DRAWN BY: RKR | DESIGNED BY: RKR
SUBMITTED BY: 4/5/04 CHIEF, ENGINEERING DIVISION
RECOMMENDED BY: 4/5/04 ASSIST. FLOOD CONTROL ENGINEER
APPROVED BY: 4/6/04 FLOOD CONTROL ENGINEER

SAN BERNARDINO COUNTY FLOOD CONTROL DISTRICT
SAN ANTONIO CREEK SYSTEM
STREET SECTIONS SHEET

DATE	SCALE	FILE NO.	DRWG. NO.
02/2004		1-112-	11 of 26

REINFORCED CONCRETE RECTANGULAR CHANNEL SCHEDULE (NORTHERLY SIDE)

SECTION	SECTION DATA						TRANSVERSE REINFORCEMENT STEEL																							LONG REINF NO. OF #4 BARS			QUANTITIES	
	SIZE (FT)		THICK (IN)			Y (IN)	B1			B2			B3			B4			B5			B6			B7		B8		B9					CONC CY/LF	REINF STEEL LBS/LF
	W/2	H	T1	T2	T3		BAR NO & SPA	VERT LENGTH	HORIZ LENGTH	BAR NO & SPA	VERT LENGTH	HORIZ LENGTH	BAR NO & SPA	VERT LENGTH	HORIZ LENGTH	BAR NO & SPA	VERT LENGTH	HORIZ LENGTH	BAR NO & SPA	VERT LENGTH	HORIZ LENGTH	BAR NO & SPA	VERT LENGTH	HORIZ LENGTH	BAR NO & SPA	LENGTH	BAR NO & SPA	LENGTH	BAR NO & SPA	LENGTH	WALL	SLAB	TOTAL		
1	10'-6"	8'-0"	10"	8½"	8"	0"	4@15"	8'-4"	11'-11"	6@15"	6'-8"	5'-5"	7@15"	3'-9"	3'-5"	4@18"	8'-4"	10"	4@18"	5'-0"	10"	5@18"	3'-0"	10"	4@18"	13'-0"	5@18"	7'-7"	4@18"	4'-10"	10	18	27	0.55	76.7
2	10'-6"	9'-0"	10"	9"	8"	0"	4@10"	9'-4½"	12'-0"	5@10"	6'-8"	5'-3"	6@10"	3'-8"	3'-5"	4@15"	9'-4½"	10¾"	4@15"	5'-1"	10¾"	5@15"	3'-1"	10¾"	4@12"	13'-1"	4@12"	6'-10"	5@12"	4'-10"	12	18	30	0.59	90.0
3	10'-6"	10'-0"	10"	10"	8"	0"	4@9"	10'-5½"	12'-1"	5@9"	7'-4"	5'-7"	6@9"	4'-0"	3'-8"	4@12"	10'-5½"	11½"	4@12"	5'-8"	11½"	5@12"	3'-4"	11½"	5@15"	13'-2"	4@15"	7'-11"	6@15"	5'-8"	14	18	32	0.64	113.3
4	8'-0"	10'-0"	10"	9¾"	8"	0"	4@9"	10'-5¾"	9'-7"	5@9"	7'-4"	5'-5"	6@9"	4'-0"	3'-8"	4@12"	10'-5¼"	11½"	4@12"	5'-8"	11½"	5@12"	3'-4"	11½"	4@12"	10'-6"	5@12"	7'-10"	5@12"	4'-8"	14	14	28	0.56	106.2
5	8'-0"	9'-0"	10"	9"	8"	0"	4@10"	9'-9½"	9'-7"	5@10"	6'-8"	5'-5"	6@10"	3'-8"	3'-8"	4@15"	9'-4½"	10¾"	4@15"	5'-1"	10¾"	5@15"	3'-1"	10¾"	4@15"	9'-9"	5@15"	7'-4"	5@15"	4'-8"	12	14	26	0.52	88.3

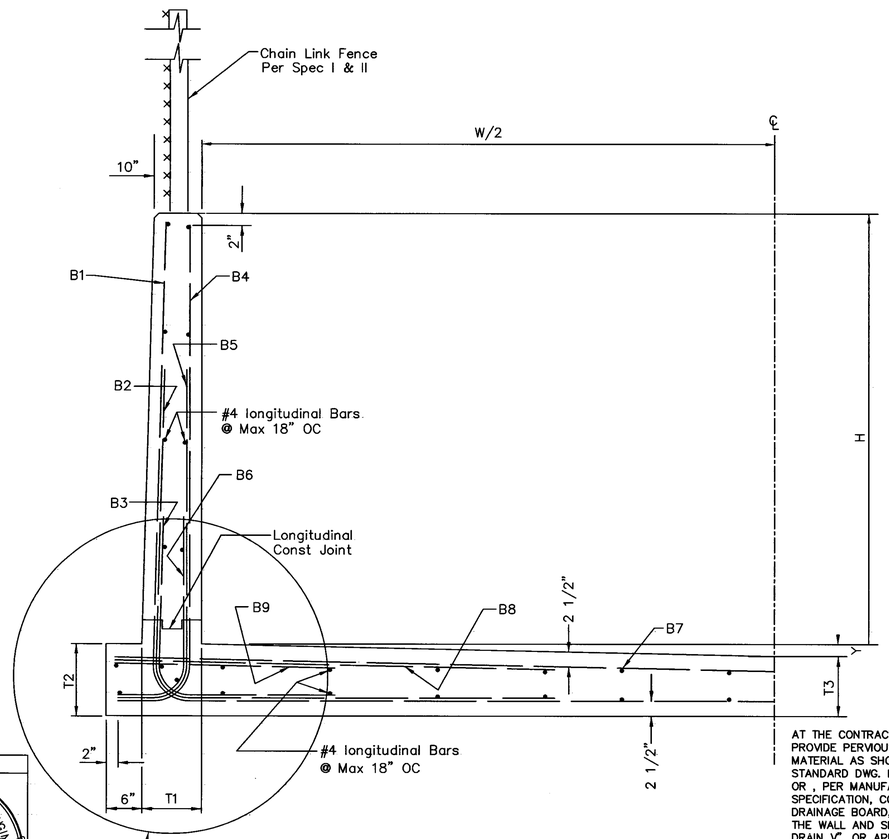

SEE SHEET 11 FOR
ALTERNATIVE "L" WALL SECTION

TYPICAL CHANNEL SECTION
NORTHERLY SIDE
Not To Scale

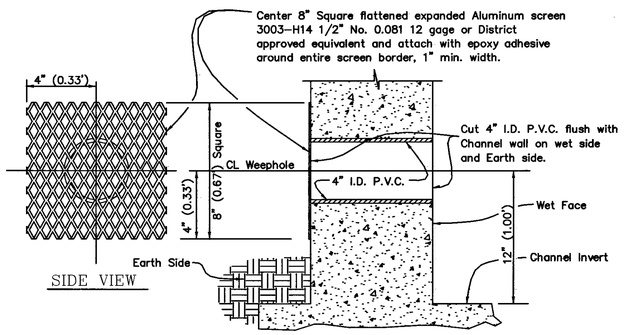

SIDE VIEW

NOTE:

Weepholes to be spaced at 12.5' (12'-6"0) O.C. to both sides of channel. Weepholes shall not be closer than 3' to proposed Expansion Joint or Weekened Plane.

WEEPHOLE DETAIL
NOT TO SCALE

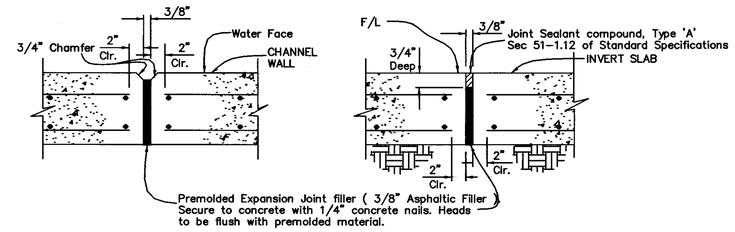

VERTICAL EXPANSION JOINT HORIZONTAL EXPANSION JOINT

TRANSVERSE EXPANSION JOINT DETAIL

Not to Scale

NOTE :
1. Locate Transverse Expansion Joints at 50.00' maximum spacing along open channel and at locations shown on the plans.
2. No Expansion Joints are required in Box Culverts.

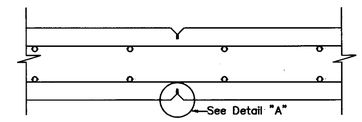

SECTION

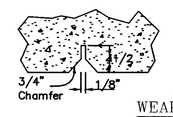

DETAIL "A"

WEAKENED PLANE FOR WALLS
⚠ AT WEAP HOLES

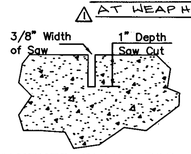

NOTE:
SPACING OF WEAKENED PLANE JOINTS SHALL NOT EXCEED 12.5' MAX. JOINTS IN WALLS & SLAB ARE TO BE IN THE SAME PLANE.

WEAKENED PLANE FOR INVERT SLAB

AT THE CONTRACTOR'S OPTION PROVIDE PERVIOUS BACKFILL MATERIAL AS SHOWN ON CALTRANS STANDARD DWG. B0-3, DETAIL 3-1. OR , PER MANUFACTURES SPECIFICATION, COMPOSITE DRAINAGE BOARD, PLACED BEHIND THE WALL AND SHALL BE "CCW SURE DRAIN V", OR APPROVED EQUIVALENT. SEE SPECIAL PROVISIONS.

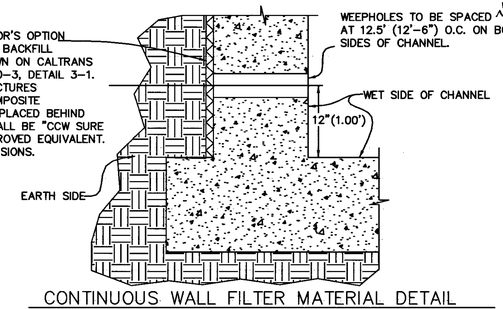

CONTINUOUS WALL FILTER MATERIAL DETAIL
NOT TO SCALE

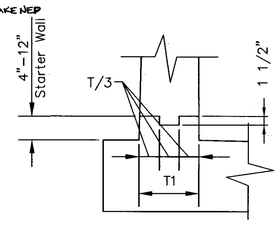

LONGITUDINAL
CONSTRUCTION JOINT
Not to Scale

NOTE: For Structural Notes and Design Criteria See Dwg. No.13

SEAL

REGISTERED PROFESSIONAL ENGINEER
H.M. FEILEN
C 29153
Exp. 3-31-07
CIVIL
STATE OF CALIFORNIA

PREPARED FOR
P&D Technologies
1100 Town & Country, Ste 300
Orange, CA 92668 (714) 835-4447
SIGNATURE
2/27/04
DATE

REVISIONS			
MARK	DATE	DESCRIPTION	BY
1	5/18/04	REVISED NOTE AND DET. A DESCRIPTION	A.G.

PROJECT ENGR.	DRAWN BY:	DESIGNED BY:
RKR	RKR	HMF

SUBMITTED BY: James Borcuts 4/5/04 CHIEF, ENGINEERING DIVISION
RECOMMENDED BY: Daniel Cohen 4/5/04 ASSIST. FLOOD CONTROL ENGINEER
APPROVED BY: Patricia D. Maad 4/6/04 FLOOD CONTROL ENGINEER

SAN BERNARDINO COUNTY
FLOOD CONTROL DISTRICT

REINFORCED CONCRETE RECTANGULAR CHANNEL SCHEDULE (NORTHERLY SIDE)

DATE	SCALE	FILE NO.	DRWG. NO.
02/2004	NA		12of26

F:\PROJECTS\WSSD\PH-C2\MCHLNC2M.dwg, 2/27/2004 8:51:00 AM

REINFORCED CONCRETE RECTANGULAR CHANNEL SCHEDULE (SOUTHERLY SIDE)

SECTION	SECTION DATA						TRANSVERSE REINFORCEMENT STEEL																								LONG REINF NO. OF #4 BARS			QUANTITIES	
	SIZE (FT)		THICK (IN)			Y (IN)	B11			B12			B13			B14			B15			B16			B17		B18		B19					CONC CY/LF	REINF STEEL LBS/LF
	W/2	H	T1	T2	T3		BAR NO & SPA	VERT LENGTH	HORIZ LENGTH	BAR NO & SPA	VERT LENGTH	HORIZ LENGTH	BAR NO & SPA	VERT LENGTH	HORIZ LENGTH	BAR NO & SPA	VERT LENGTH	HORIZ LENGTH	BAR NO & SPA	VERT LENGTH	HORIZ LENGTH	BAR NO & SPA	VERT LENGTH	HORIZ LENGTH	BAR NO & SPA	LENGTH	BAR NO & SPA	LENGTH	BAR NO & SPA	LENGTH	WALL	SLAB	TOTAL		
11	10'-6"	8'-0"	10"	8½"	8"	0"	5@15"	8'-4"	12'-0"	5@15"	7'-0"	4'-3"	5@15"	4'-0"	3'-3"	4@18"	8'-4"	10"	4@18"	5'-0"	10"	5@18"	3'-0"	10"	4@18"	13'-0"	5@18"	6'-10"	5@18"	4'-10"	10	18	28	0.55	74.3
12	10'-6"	9'-0"	10"	8½"	8"	0"	5@15"	9'-4"	12'-0"	6@15"	8'-0"	4'-3"	6@15"	4'-0"	2'-0"	4@15"	9'-4"	10"	4@15"	5'-0"	10"	5@15"	3'-0"	10"	4@15"	13'-0"	5@15"	6'-10"	6@15"	4'-10"	12	18	30	0.58	90.0
13	10'-6"	10'-0"	10"	8½"	8"	0"	5@15"	10'-4"	12'-0"	5@15"	9'-0"	5'-3"	7@15"	6'-0"	3'-3"	4@12"	10'-4"	10"	4@12"	6-0"	10"	5@12"	3'-0"	10"	5@18"	13'-0"	6@18"	6'-10"	7@18"	4'-10"	14	18	32	0.61	105.5
14	10'-6"	11'-0"	10"	9"	8"	0"	5@15"	11'-4½"	12'-0"	6@15"	10'-0"	5'-4"	7@15"	6'-0"	3'-4"	4@18"	11'-4½"	10½"	6@18"	7'-0"	10½"	7@18"	4'-0"	10½"	5@18"	13'-1"	6@18"	6'-10"	6@18"	4'-10"	16	18	34	0.65	116.7
15	10'-6"	12'-0"	10"	9½"	8"	0"	5@15"	12'-5"	12'-0"	6@15"	10'-7"	5'-4"	7@15"	6'-1"	3'-4"	4@18"	12'-5"	11"	5@18"	7'-1"	11"	7@18"	4'-4"	11"	5@18"	13'-1"	6@18"	6'-10"	6@18"	4'-10"	16	18	34	0.69	117.1
16	10'-6"	13'-0"	10'	10"	8"	0"	4@9"	13'-5½"	12'-0"	5@9"	11'-2"	6'-5"	6@9"	6'-2"	4'-5"	4@15"	13'-5½"	11½"	5@15"	6-2"	11½"	6@15"	3'-5"	11½"	5@15"	13'-2"	4@15"	7'-11"	4@15"	4'-11"	18	18	36	0.73	129.1
17	8'-0"	10'-0"	10"	8½"	8"	0"	5@15"	10'-4"	9'-6"	5@15"	9'-0"	4'-6"	7@15"	6'-0"	3'-3"	4@12"	10'-4"	10"	4@12"	6'-0"	10"	5@12"	3'-0"	10"	4@12"	10'-4"	5@12"	6'-6"	6@12"	4'-6"	14	14	28	0.55	98.1
18	8'-0"	11'-0"	10"	9"	8"	0"	5@15"	11'-4½"	9'-6"	6@15"	10'-0"	4'-11"	7@15"	6'-0"	3'-2"	4@18"	11'-4½"	10½"	6@18"	7'-0"	10½"	7@18"	4'-0"	10½"	5@15"	9'-9"	5@15"	6'-0"	6@15"	4'-4"	16	14	30	0.58	108.70
19	8'-0"	12'-0"	10"	9½"	8"	0"	5@15"	12'-5"	9'-6"	6@15"	10'-7"	5'-4"	7@15"	6'-1"	3'-3"	4@18"	12'-5"	11"	5@18"	7'-1"	11"	7@18"	4'-4"	11"	4@15"	9'-9"	5@15"	7'-1"	5@15"	4'-6"	16	14	30	0.62	106.24
20	8'-0"	9'-0"	10"	8½"	8"	0"	5@15"	9'-4"	9'-6"	6@15"	8'-0"	4'-6"	6@15"	4'-0"	2'-0"	4@15"	9'-4"	10"	4@15"	5'-0"	10"	5@15"	3'-0"	10"	4@15"	9'-9"	5@15"	6'-0"	6@15"	4'-0"	12	14	26	0.52	82.1

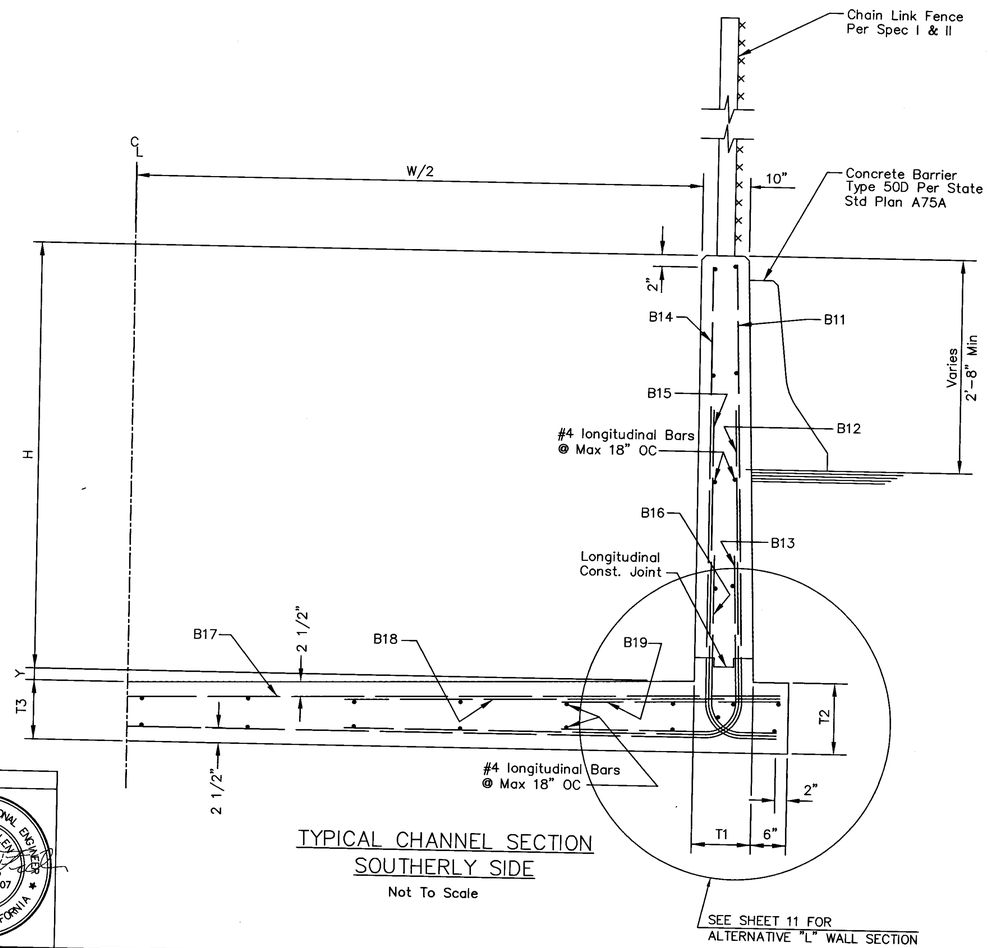

TYPICAL CHANNEL SECTION
SOUTHERLY SIDE
Not To Scale

SEE SHEET 11 FOR
ALTERNATIVE "L" WALL SECTION

STRUCTURAL NOTES

1 DIMENSIONS FROM FACE OF CONCRETE TO STEEL ARE TO OUTSIDE FACE OF BAR AND SHALL BE TWO INCHES UNLESS OTHERWISE SHOWN.

2 CONCRETE DIMENSIONS SHALL BE MEASURED HORIZONTALLY OR VERTICALLY ON THE PROFILE, AND PARALLEL TO OR AT RIGHT ANGLES (OR RADIALLY) TO CENTERLINE OF CONDUIT ON THE PLAN EXCEPT AS OTHERWISE SHOWN.

3 ALL BAR BENDS AND HOOKS SHALL CONFORM TO THE AMERICAN CONCRETE INSTITUTE'S "BUILDING CODE REQUIREMENTS FOR REINFORCED CONCRETE", LATEST EDITION.

4 PLACING OF REINFORCEMENT SHALL CONFORM TO THE AMERICAN CONCRETE INSTITUTE'S "BUILDING CODE REQUIREMENTS FOR REINFORCED CONCRETE", LATEST EDITION.

5 TRANSVERSE EXPANSION JOINTS SHALL NOT BE PLACED WITHIN 30 INCHES OF INLETS.

6 TRANSVERSE EXPANSION JOINTS IN WALLS AND SLABS SHALL BE IN THE SAME PLANE. NO STAGGERING OF JOINTS WILL BE PERMITTED. TRANSVERSE CONSTRUCTION JOINTS SHALL BE NORMAL OR RADIAL TO THE CENTERLINE OF CONSTRUCTION.

7 THE TRANSVERSE REINFORCING STEEL SHALL TERMINATE ONE AND ONE-HALF INCHES FROM THE CONCRETE SURFACES UNLESS OTHERWISE SHOWN ON THE STRUCTURAL DETAILS.

8 EXPOSED EDGES OF CONCRETE MEMBERS SHALL BE ROUNDED OR BEVELED.

9 NO SPLICES IN TRANSVERSE STEEL REINFORCEMENT WILL BE PERMITTED OTHER THAN SHOWN ON THE DRAWING WITHOUT APPROVAL OF THE ENGINEER. NO MORE THAN TWO SPLICES WILL BE PERMITTED IN ANY LONGITUDINAL BAR BETWEEN TRANSVERSE JOINTS. SPLICES WILL BE STAGGERED. SPLICING SHALL BE IN ACCORDANCE WITH THE LATEST ACI CODE REQUIREMENTS.

10 LONGITUDINAL STEEL SHALL TERMINATE TWO INCHES FROM TRANSVERSE EXPANSION JOINTS.

11 TRANSVERSE JOINTS SHALL BE SPACED NOT TO EXCEED 50 FEET NOR BE LESS THAN 10 FEET, MEASURED ALONG THE CENTERLINE OF CONSTRUCTION, EXCEPT AS OTHERWISE SHOWN ON THE DRAWINGS.

12 TRANSVERSE JOINTS SHALL BE PLACED AT THE JUNCTION OF RECTANGULAR OPEN CHANNEL SECTIONS WITH CLOSED CONDUIT SECTIONS.

13 ALL RECTANGULAR OPEN CHANNEL WALLS SHALL BE FENCED IN ACCORDANCE WITH SPEC I & II, EXCEPT AS OTHERWISE SHOWN ON THE DRAWINGS.

14 UNLESS OTHERWISE SHOWN ON THE DRAWINGS, IN CURVED SECTIONS, THE MAXIMUM SPACING OF BARS SHALL NOT EXCEED THAT SHOWN ON THE TYPICAL SECTIONS. STEEL SHALL BE PLACED RADIALLY FROM THE MAXIMUM SPACING.

15 AT THE BEGINNING AND ENDING OF ALL POURS, A COMPLETE CURTAIN OF REINFORCEMENT COMPOSED OF B1, B4, B7, B11, B14 AND B17 BARS SHALL BE PLACED THREE INCHES FROM THE TRANSVERSE EXPANSION JOINT.

16 WHERE CHANNELS VARY IN HEIGHT OR WIDTH BETWEEN SECTIONS SHOWN IN SCHEDULE VARY THE CONCRETE THICKNESSES UNIFORMLY BETWEEN THE TWO ADJOINING SECTIONS. REINFORCING SHALL BE THAT FROM WHICHEVER ADJOINING SECTION PROVIDES THE GREATER STEEL AREA. VARY THE LENGTH OF BARS B1, B4, B7, B11, B14 AND B17 UNIFORMLY ALONG THE TRANSITION. EXCEPT AS OTHERWISE SHOWN ON THE DRAWINGS THE CHANNEL WIDTH AND/OR HEIGHT MAY EXCEED THE SCHEDULED WIDTH/HEIGHT BY SIX INCHES MAXIMUM BEFORE CHANGING TO THE NEXT HIGHEST WIDTH/HEIGHT IN THE SCHEDULE.

STRUCTURAL DESIGN CRITERIA
LACFCD STRUCTURAL DESIGN MANUAL
DATED APRIL 1982
LIVE LOADS: H20-S16-44 UNLESS NOTED OTHERWISE
DEAD LOADS: DRY BACKFILL= 40PCF
EQUIVALENT FLUID PRESSURE
FLOODED BACKFILL= 62.5 PCF
EQUIVALENT FLUID PRESSURE
INTERNAL WATER= 40 PCF NET
EQUIVALENT FLUID PRESSURE
ALLOWABLE STRESSES:
FC'= 4000 PSI
FC = 1800 PSI
FS = 24000 PSI
N = 8
SHEAR AND BOND STRESSES
PER ACI 318-63
FOUNDATION MODULUS, K= 165 PCI

SEAL
REGISTERED PROFESSIONAL ENGINEER
R. M. FETLER
C 29153
Exp. 3-31-07
CIVIL
STATE OF CALIFORNIA

PREPARED FOR
P&D Technologies
1100 Town & Country, Ste 300
Orange, CA 92668 (714) 835-4447
SIGNATURE 2/27/04 DATE

REVISIONS			
MARK	DATE	DESCRIPTION	BY

SAN BERNARDINO COUNTY FLOOD CONTROL DISTRICT

REINFORCED CONCRETE RECTANGULAR CHANNEL SCHEDULE (SOUTHERLY SIDE)

PROJECT ENGR.	DRAWN BY:	DESIGNED BY:
RKR	RKR	HMF

SUBMITTED BY: 4/5/04 James Bonacci CHIEF, ENGINEERING DIVISION
RECOMMENDED BY: 4/5/04 ASSIST. FLOOD CONTROL ENGINEER
APPROVED BY: 4/6/04 FLOOD CONTROL ENGINEER

DATE	SCALE	FILE NO.	DRWG. NO.
02/2004	NO SCALE		13of26

F:\PROJECTS\WSSD\PH-C2M\CHL\SC2M.DWG, 2/27/2004 2:58:53 PM

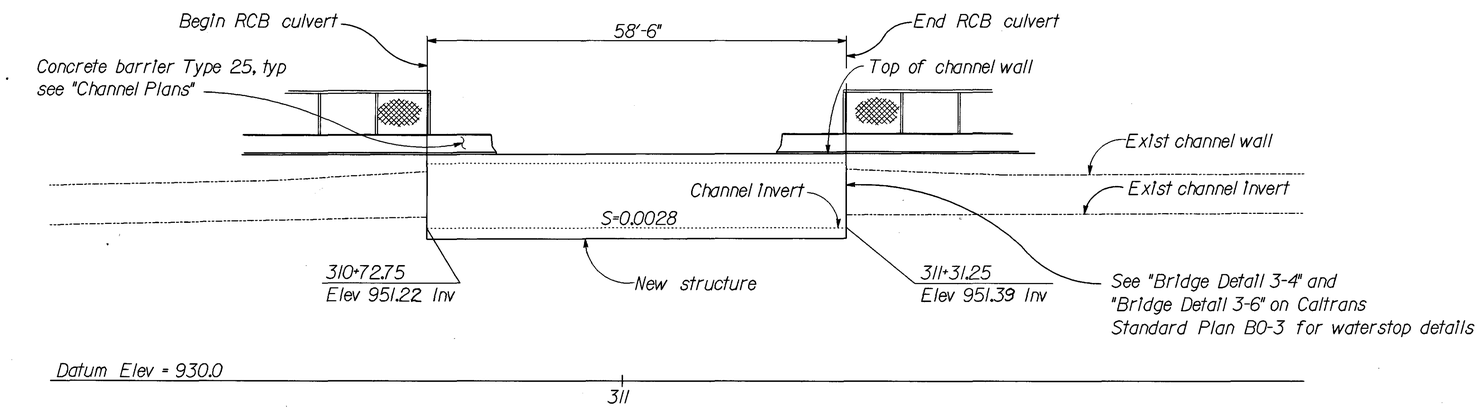

ELEVATION

1" = 10'

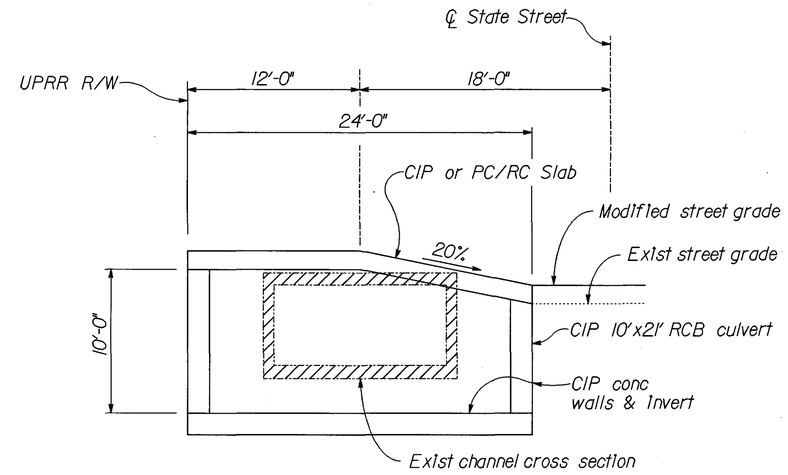

TYPICAL SECTION

1" = 5'

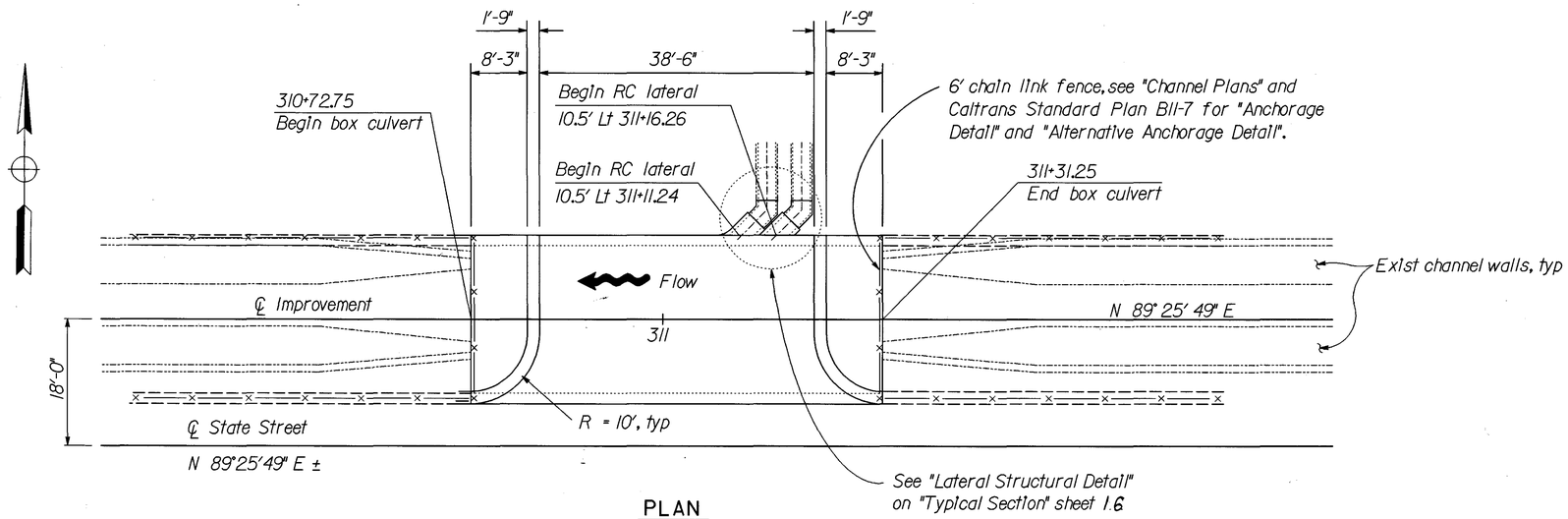

PLAN

1" = 10'

INDEX TO PLANS

Sheet No.	Title
14	General Plan
15	Foundation Plan
16	Miscellaneous Details

CALTRANS STANDARD PLANS DATED JULY, 1992

Sheet No.	Title
A10A	Abbreviations
A10B	Symbols
A62E	Excavation And Backfill Cast-In-Place Reinforced Concrete Box And Arch Culverts
B0-3	Bridge Details
B11-7	Chain Link Railing

LEGEND

- Denotes existing structure
- Denotes new construction
- Denotes concrete removal
- Denotes chain link fence

APWA STANDARD PLANS DATED 1992

Sheet No.	Title
333-0	Junction Structure - Pipe to RCB

Notes :

1. The Contractor shall verify all controlling field dimensions before ordering or fabricating any material.
2. For log of test borings, see Geotechnical Investigation Report Bridges and/or Culverts at Ramona Avenue and Monte Vista Avenue West Street Storm Drain San Bernardino County, California dated June 21, 1993

GENERAL NOTES
LOAD FACTOR DESIGN

Design: Bridge design specifications
(1983 AASHTO with Interims and Revisions by CALTRANS)

Dead Load :
(1) Vertical earth pressure : 140 pcf
Horizontal earth pressure : 100 pcf
(2) Vertical earth pressure : 140 pcf
Horizontal earth pressure : 35 pcf

Live Load : HS20-44

Reinforced concrete:

f'_c = 4,000 psi (concrete compressive strength at 28 days) for RCB Culvert

fy = 60,000 psi (yield strength of reinforcement)

SEAL

REGISTERED PROFESSIONAL ENGINEER
H. H. HAMZAWI
No. 50183
Exp. 6-30-05
CIVIL
STATE OF CALIFORNIA

PREPARED FOR

P&D Consultants
1100 Town & Country, Ste 300
Orange, CA 92668 (714) 835-4447

DOKKEN ENGINEERING
3054 Gold Canal Drive
Rancho Cordova, CA 95670
(916) 858-0642

REVISIONS			
MARK	DATE	DESCRIPTION	BY

PROJECT ENGR. | DRAWN BY: | DESIGNED BY:

SUBMITTED BY: 4/5/04 James Borcuch CHIEF, ENGINEERING DIVISION

RECOMMENDED BY: Vanesh Olson 4/5/04 ASSIST. FLOOD CONTROL ENGINEER

APPROVED BY: 4/6/04 Patrick J. Mead FLOOD CONTROL ENGINEER

SAN BERNARDINO COUNTY
FLOOD CONTROL DISTRICT

PRIVATE ACCESS #4
CULVERT AT
GRAND AVE

GENERAL PLAN

DATE	SCALE	FILE NO.	DRWG. NO.
	AS NOTED		14 of 26

886BGPO1.DGN REV.8 KD 4-21-00

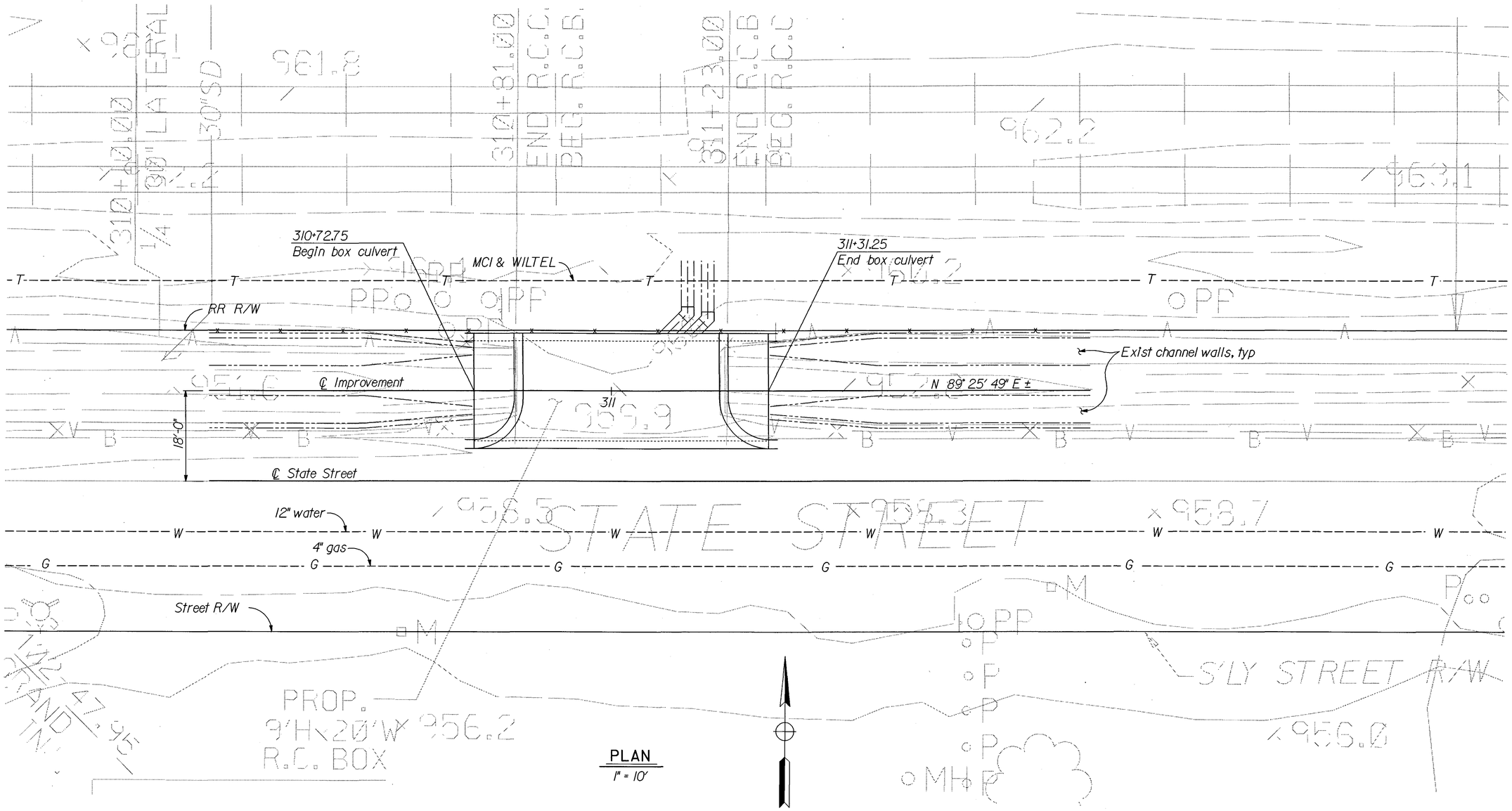

PLAN
1" = 10'

SEAL

REGISTERED PROFESSIONAL ENGINEER
H. H. HAMZAWI
No. 50183
Exp. 6-30-05
CIVIL
STATE OF CALIFORNIA

Hazem Hamzawi

PREPARED FOR

P&D Consultants
1100 Town & Country, Ste 300
Orange, CA 92668 (714) 835-4447

DOKKEN ENGINEERING
3054 Gold Canal Drive
Rancho Cordova, CA 95670
(916) 858-0642

Notes :

1. The Contractor shall verify all controlling field dimensions before ordering or fabricating any material.

LEGEND

Denotes existing structure

Denotes new construction

REVISIONS			
MARK	DATE	DESCRIPTION	BY

PROJECT ENGR.	DRAWN BY:	DESIGNED BY:

SUBMITTED BY: 4/5/04 James Bourque CHIEF, ENGINEERING DIVISION
RECOMMENDED BY: 4/5/04 ASSIST. FLOOD CONTROL ENGINEER
APPROVED BY: 4/6/04 Patrick J. Mead FLOOD CONTROL ENGINEER

SAN BERNARDINO COUNTY
FLOOD CONTROL DISTRICT

PRIVATE ACCESS #4 CULVERT AT GRAND AVE

FOUNDATION PLAN

DATE	SCALE	FILE NO.	DRWG. NO.
	AS NOTED		15 of 26

886BFP01.DGN REV.4 CH 10-7-99

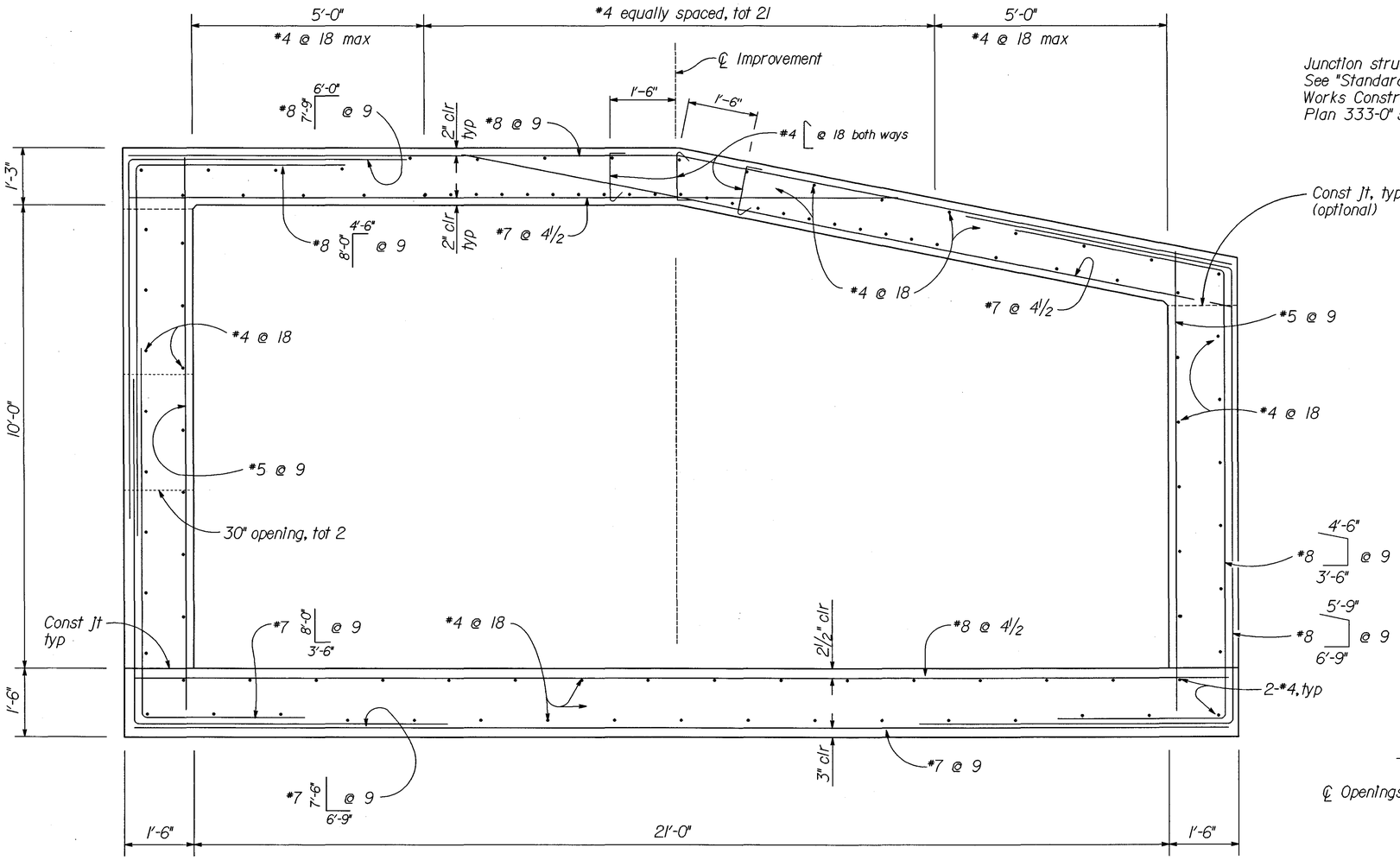

TYPICAL SECTION

¾" = 1'-0"

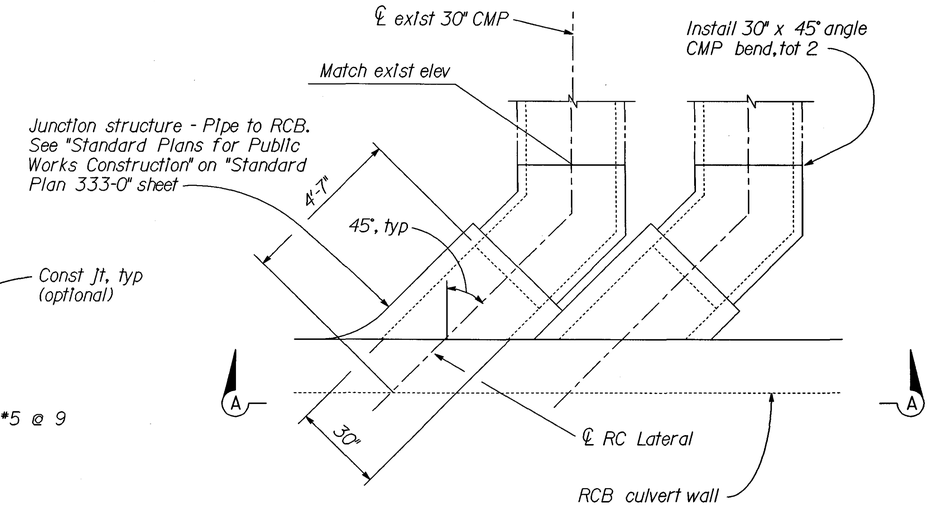

LATERAL / RCB JUNCTION DETAIL

½" = 1'-0"

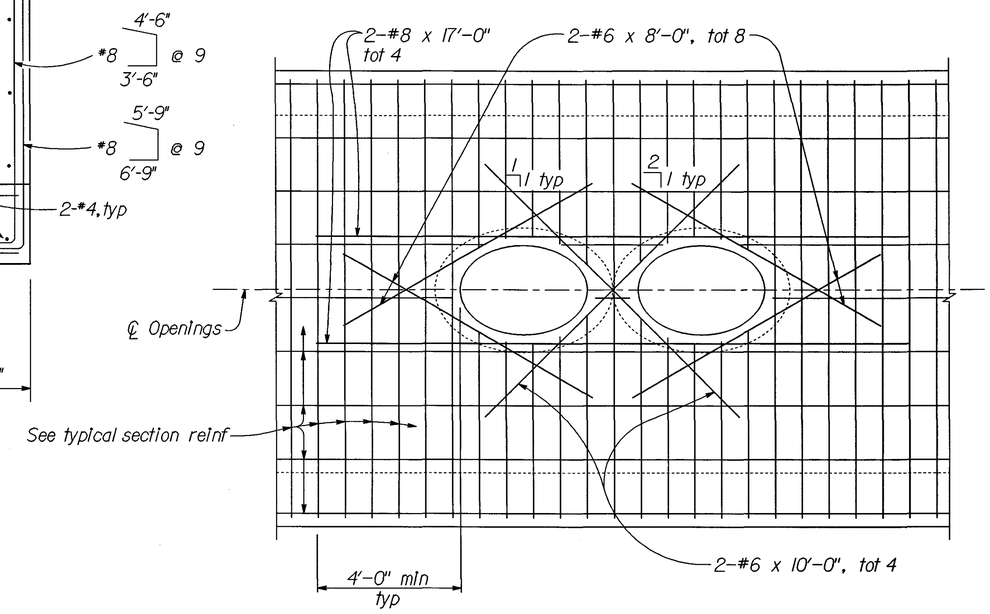

VIEW A-A

½" = 1'-0"

SEAL

REGISTERED PROFESSIONAL ENGINEER
H. H. HAMZAWI
No. 50183
Exp. 6-30-05
CIVIL
STATE OF CALIFORNIA

Hassan Hamzawi

PREPARED FOR

P&D Consultants
1100 Town & Country, Ste 300
Orange, CA 92668 (714) 835-4447

DOKKEN ENGINEERING
3054 Gold Canal Drive
Rancho Cordova, CA 95670
(916) 858-0642

Notes :

1. The Contractor shall verify all controlling field dimensions before ordering or fabricating any material.

LEGEND

Denotes existing structure

Denotes new construction

REVISIONS			
MARK	DATE	DESCRIPTION	BY

PROJECT ENGR. | DRAWN BY: | DESIGNED BY:

SUBMITTED BY: 4/5/04 James Borcuk CHIEF, ENGINEERING DIVISION

RECOMMENDED BY: 4/5/04 ASSIST. FLOOD CONTROL ENGINEER

APPROVED BY: 4/6/04 FLOOD CONTROL ENGINEER

SAN BERNARDINO COUNTY FLOOD CONTROL DISTRICT

PRIVATE ACCESS #4 CULVERT AT GRAND AVENUE

TYPICAL SECTION

DATE	SCALE	FILE NO.	DRWG. NO.
	AS NOTED		16 of 26

886BTS01DGN REV.3 CH 10-7-99

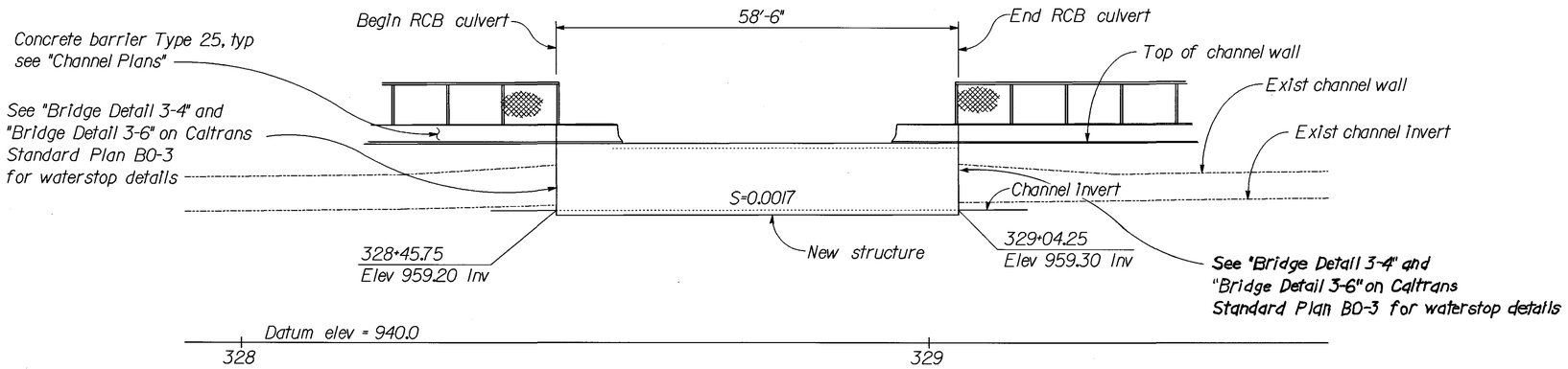

ELEVATION

1" = 10'

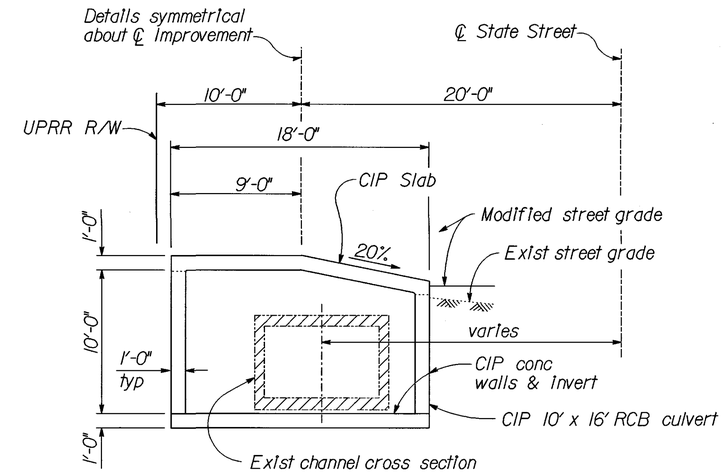

TYPICAL SECTION

1" = 5'

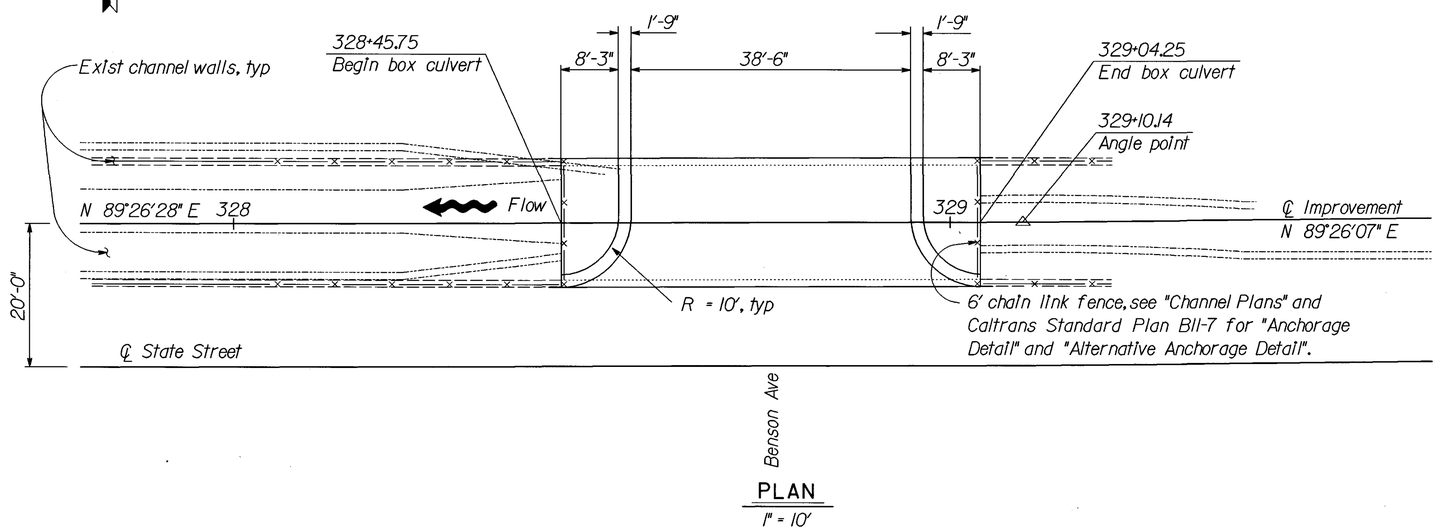

PLAN

1" = 10'

INDEX TO PLANS

Sheet No.	Title
17	General Plan
18	Foundation Plan
19	Typical Section

STANDARD PLANS DATED JULY, 1992

Sheet No.	Title
A10A	Abbreviations
A10B	Symbols
A62E	Excavation And Backfill Cast-In-Place Reinforced Concrete Box And Arch Culverts
B0-3	Bridge Details
B11-7	Chain Link Railing

LEGEND

- Denotes existing structure
- Denotes new construction
- Denotes concrete removal
- Denotes chain link fence

Notes :

1. The Contractor shall verify all controlling field dimensions before ordering or fabricating any material.
2. For log of test borings, see Geotechnical Investigation Report Bridges and/or Culverts at Ramona Avenue and Monte Vista Avenue West Street Storm Drain San Bernardino County, California dated June 21, 1993

GENERAL NOTES
LOAD FACTOR DESIGN

Design: Bridge design specifications
(1983 AASHTO with Interims and Revisions by CALTRANS)

Dead Load :
(1) Vertical earth pressure : 140 pcf
Horizontal earth pressure : 100 pcf
(2) Vertical earth pressure : 140 pcf
Horizontal earth pressure : 35 pcf

Live Load : HS20-44

Reinforced concrete:

f'_c = 4,000 psi (concrete compressive strength at 28 days) for RCB Culvert

fy = 60,000 psi (yield strength of reinforcement)

SEAL

REGISTERED PROFESSIONAL ENGINEER
H. H. HAMZAWI
No. 50183
Exp. 6-30-05
CIVIL
STATE OF CALIFORNIA

PREPARED FOR

P&D Consultants
1100 Town & Country, Ste 300
Orange, CA 92668 (714) 835-4447

DOKKEN ENGINEERING
3054 Gold Canal Drive
Rancho Cordova, CA 95670
(916) 858-0642

REVISIONS			
MARK	DATE	DESCRIPTION	BY

PROJECT ENGR. | DRAWN BY: | DESIGNED BY:

SUBMITTED BY: James Bourque 4/5/04 CHIEF, ENGINEERING DIVISION

RECOMMENDED BY: Donald Olson 4/5/04 ASSIST. FLOOD CONTROL ENGINEER

APPROVED BY: Richard T. Morrison 4/6/04 FLOOD CONTROL ENGINEER

SAN BERNARDINO COUNTY
FLOOD CONTROL DISTRICT

PRIVATE ACCESS #5
CULVERT
AT BENSON AVE

GENERAL PLAN

DATE	SCALE	FILE NO.	DRWG. NO.
	AS NOTED		17 of 26

886CCPOLDGN REV.6 KD 4-21-00

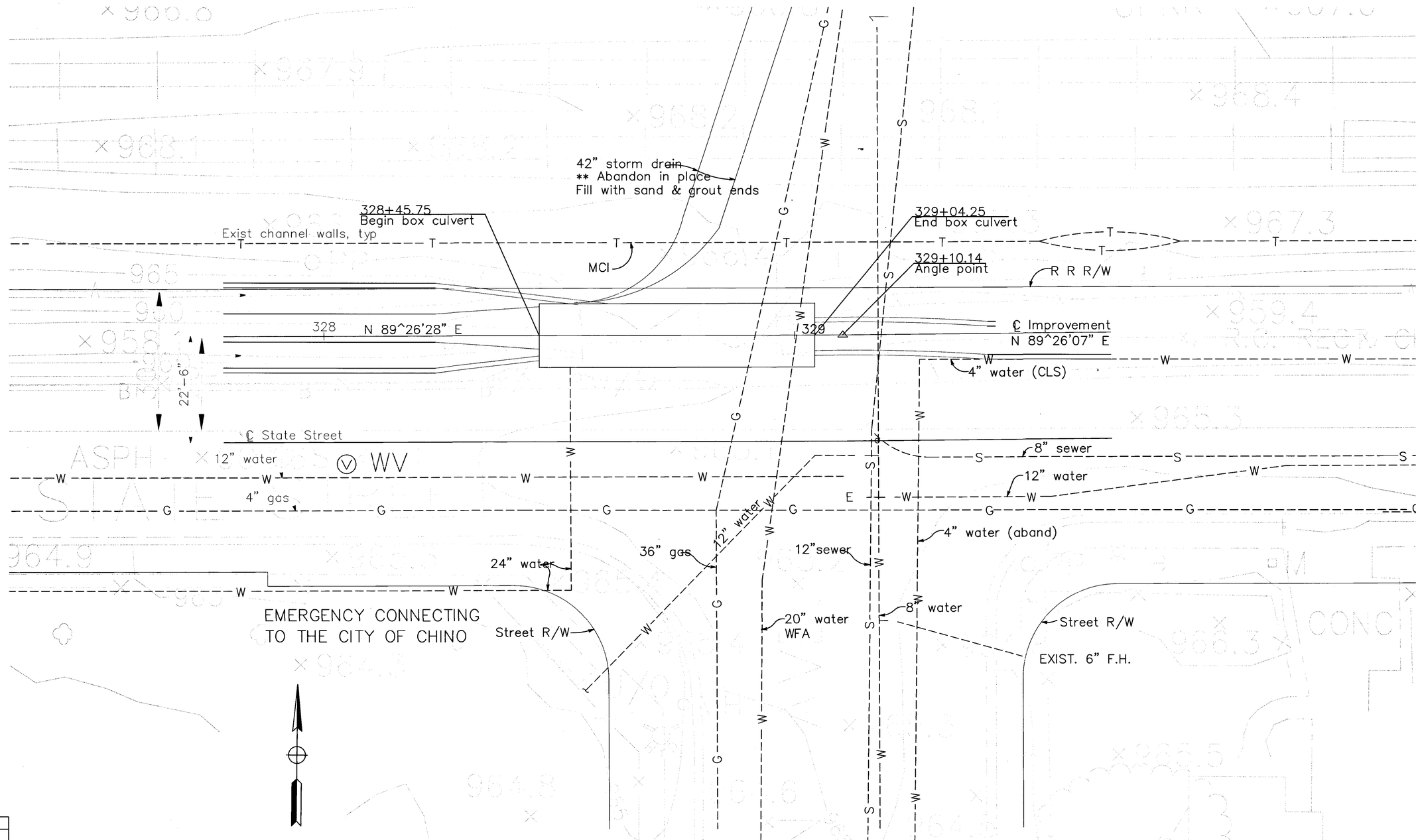

PLAN
1" = 10'
BENSON AVE.

Notes :
1. The Contractor shall verify all controlling field dimensions before ordering or fabricating any material.

SEAL
REGISTERED PROFESSIONAL ENGINEER
H.H.HAMZAWI
No. 50183
Exp. 6-30-05
CIVIL
STATE OF CALIFORNIA

PREPARED FOR
P&D Consultants
1100 Town & Country, Ste 300
Orange, CA 92668 (714) 835-4447

DOKKEN ENGINEERING
3054 Gold Canal Drive
Rancho Cordova, CA 95670
(916) 858-0642

REVISIONS			
MARK	DATE	DESCRIPTION	BY

PROJECT ENGR. | DRAWN BY: | DESIGNED BY:
SUBMITTED BY: 4/5/04 James Borcuk CHIEF, ENGINEERING DIVISION
RECOMMENDED BY: Dana R. Olson 4/5/04 ASSIST. FLOOD CONTROL ENGINEER
APPROVED BY: 4/6/04 Patrick J. Mead FLOOD CONTROL ENGINEER

SAN BERNARDINO COUNTY
FLOOD CONTROL DISTRICT

PRIVATE ACCESS #5
CULVERT
AT BENSON AVE

FOUNDATION PLAN

DATE	SCALE	FILE NO.	DRWG. NO.
3/2004	AS NOTED		18of26

886CFP01.DGN REV.2 TD 3-3-97

F:\PROJECTS\WSSD\dokken\886C_Benson\886CFP01.dwg, 3/31/2004 12:36:20 PM

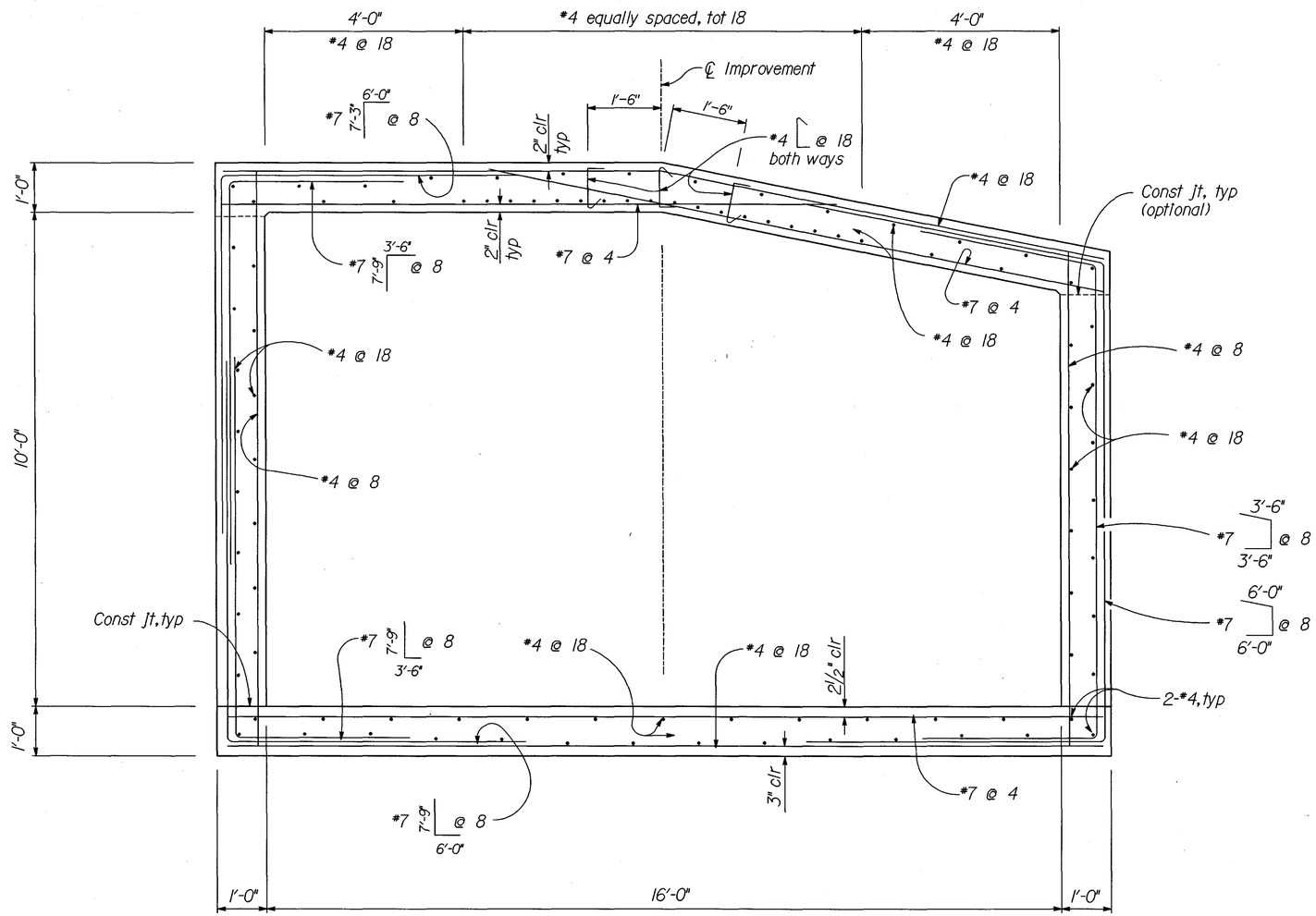

TYPICAL SECTION

3/4" = 1'-0"

SEAL

REGISTERED PROFESSIONAL ENGINEER
H. H. HAMZAWI
No. 50183
Exp. 6-30-05
CIVIL
STATE OF CALIFORNIA

Hassan Hamzawi

PREPARED FOR

P&D Consultants
1100 Town & Country, Ste 300
Orange, CA 92668 (714) 835-4447

DOKKEN ENGINEERING
3054 Gold Canal Drive
Rancho Cordova, CA 95670
(916) 858-0642

REVISIONS			
MARK	DATE	DESCRIPTION	BY

PROJECT ENGR.	DRAWN BY:	DESIGNED BY:

SUBMITTED BY: 4/5/04 James Boccuk CHIEF, ENGINEERING DIVISION

RECOMMENDED BY: Vana R. Alam 4/5/04 ASSIST. FLOOD CONTROL ENGINEER

APPROVED BY: 4/6/04 Patrick J Mead FLOOD CONTROL ENGINEER

SAN BERNARDINO COUNTY
FLOOD CONTROL DISTRICT

PRIVATE ACCESS #5
CULVERT AT
BENSON AVENUE

TYPICAL SECTION

DATE	SCALE	FILE NO.	DRWG. NO.
	AS NOTED		19 of 26

886CTSOI.DGN REV.2 CH 10-7-99

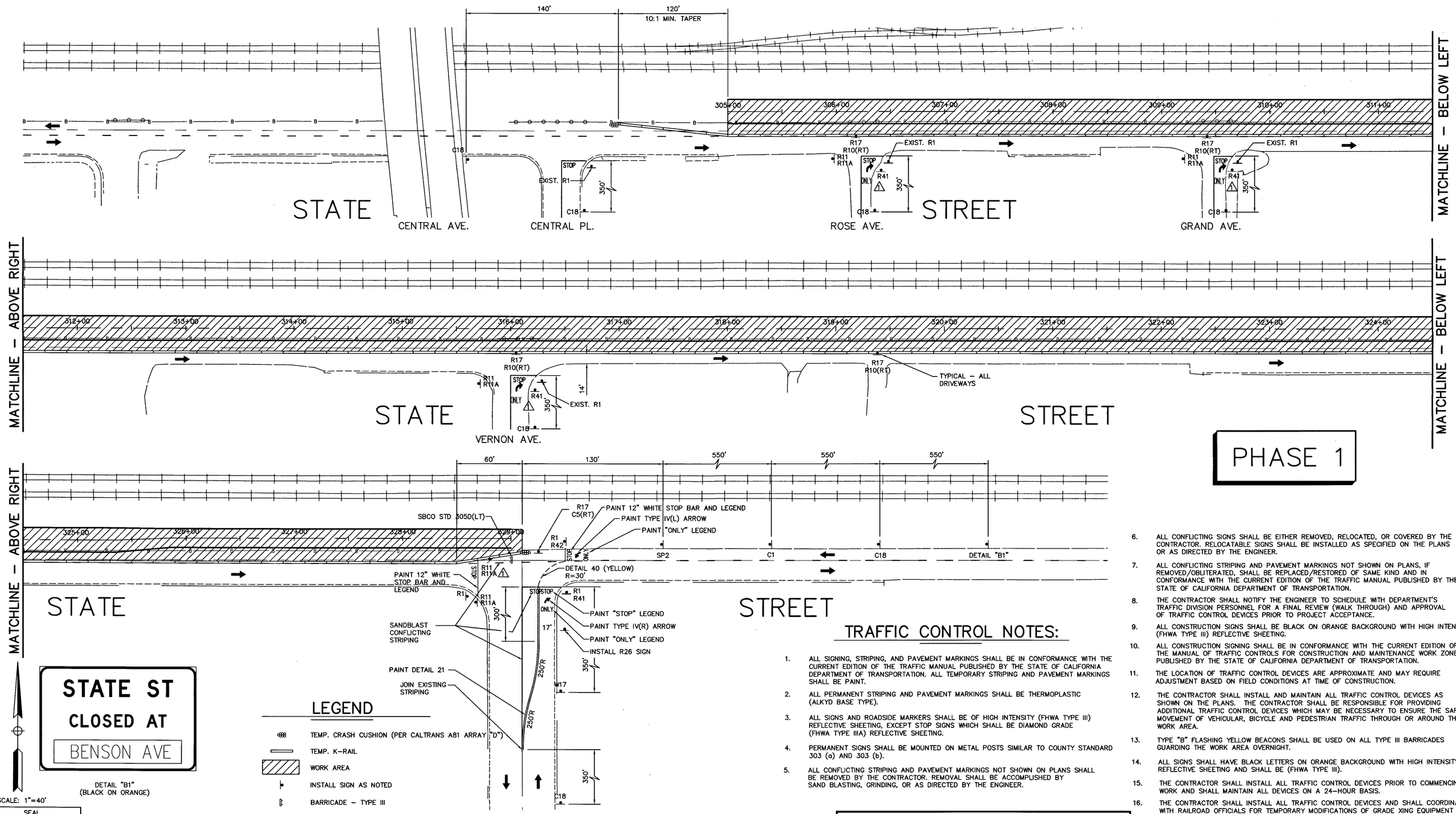

PHASE 1

STATE ST CLOSED AT BENSON AVE

DETAIL "B1"
(BLACK ON ORANGE)

SCALE: 1"=40'

LEGEND

- TEMP. CRASH CUSHION (PER CALTRANS A81 ARRAY "D")
- TEMP. K-RAIL
- WORK AREA
- INSTALL SIGN AS NOTED
- BARRICADE – TYPE III
- DIRECTION OF TRAFFIC FLOW
- FLASHING ARROW SIGN
- DELINEATOR

STATE ST DETOUR →
SP1

STATE ST DETOUR ←
SP2

↑ **STATE ST DETOUR**
SP3

(BLACK LETTERS ON ORANGE BACKGROUND 4" D LETTERS)

△1

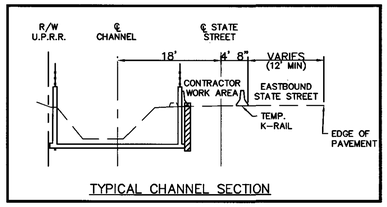

TYPICAL CHANNEL SECTION

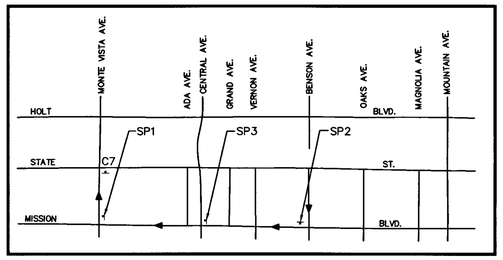

DETOUR SIGNING

TRAFFIC CONTROL NOTES:

1. ALL SIGNING, STRIPING, AND PAVEMENT MARKINGS SHALL BE IN CONFORMANCE WITH THE CURRENT EDITION OF THE TRAFFIC MANUAL PUBLISHED BY THE STATE OF CALIFORNIA DEPARTMENT OF TRANSPORTATION. ALL TEMPORARY STRIPING AND PAVEMENT MARKINGS SHALL BE PAINT.
2. ALL PERMANENT STRIPING AND PAVEMENT MARKINGS SHALL BE THERMOPLASTIC (ALKYD BASE TYPE).
3. ALL SIGNS AND ROADSIDE MARKERS SHALL BE OF HIGH INTENSITY (FHWA TYPE III) REFLECTIVE SHEETING, EXCEPT STOP SIGNS WHICH SHALL BE DIAMOND GRADE (FHWA TYPE IIIA) REFLECTIVE SHEETING.
4. PERMANENT SIGNS SHALL BE MOUNTED ON METAL POSTS SIMILAR TO COUNTY STANDARD 303 (a) AND 303 (b).
5. ALL CONFLICTING STRIPING AND PAVEMENT MARKINGS NOT SHOWN ON PLANS SHALL BE REMOVED BY THE CONTRACTOR. REMOVAL SHALL BE ACCOMPLISHED BY SAND BLASTING, GRINDING, OR AS DIRECTED BY THE ENGINEER.
6. ALL CONFLICTING SIGNS SHALL BE EITHER REMOVED, RELOCATED, OR COVERED BY THE CONTRACTOR. RELOCATABLE SIGNS SHALL BE INSTALLED AS SPECIFIED ON THE PLANS OR AS DIRECTED BY THE ENGINEER.
7. ALL CONFLICTING STRIPING AND PAVEMENT MARKINGS NOT SHOWN ON PLANS, IF REMOVED/OBLITERATED, SHALL BE REPLACED/RESTORED OF SAME KIND AND IN CONFORMANCE WITH THE CURRENT EDITION OF THE TRAFFIC MANUAL PUBLISHED BY THE STATE OF CALIFORNIA DEPARTMENT OF TRANSPORTATION.
8. THE CONTRACTOR SHALL NOTIFY THE ENGINEER TO SCHEDULE WITH DEPARTMENT'S TRAFFIC DIVISION PERSONNEL FOR A FINAL REVIEW (WALK THROUGH) AND APPROVAL OF TRAFFIC CONTROL DEVICES PRIOR TO PROJECT ACCEPTANCE.
9. ALL CONSTRUCTION SIGNS SHALL BE BLACK ON ORANGE BACKGROUND WITH HIGH INTENSITY (FHWA TYPE III) REFLECTIVE SHEETING.
10. ALL CONSTRUCTION SIGNING SHALL BE IN CONFORMANCE WITH THE CURRENT EDITION OF THE MANUAL OF TRAFFIC CONTROLS FOR CONSTRUCTION AND MAINTENANCE WORK ZONES, PUBLISHED BY THE STATE OF CALIFORNIA DEPARTMENT OF TRANSPORTATION.
11. THE LOCATION OF TRAFFIC CONTROL DEVICES ARE APPROXIMATE AND MAY REQUIRE ADJUSTMENT BASED ON FIELD CONDITIONS AT TIME OF CONSTRUCTION.
12. THE CONTRACTOR SHALL INSTALL AND MAINTAIN ALL TRAFFIC CONTROL DEVICES AS SHOWN ON THE PLANS. THE CONTRACTOR SHALL BE RESPONSIBLE FOR PROVIDING ADDITIONAL TRAFFIC CONTROL DEVICES WHICH MAY BE NECESSARY TO ENSURE THE SAFE MOVEMENT OF VEHICULAR, BICYCLE AND PEDESTRIAN TRAFFIC THROUGH OR AROUND THE WORK AREA.
13. TYPE "B" FLASHING YELLOW BEACONS SHALL BE USED ON ALL TYPE III BARRICADES GUARDING THE WORK AREA OVERNIGHT.
14. ALL SIGNS SHALL HAVE BLACK LETTERS ON ORANGE BACKGROUND WITH HIGH INTENSITY REFLECTIVE SHEETING AND SHALL BE (FHWA TYPE III).
15. THE CONTRACTOR SHALL INSTALL ALL TRAFFIC CONTROL DEVICES PRIOR TO COMMENCING WORK AND SHALL MAINTAIN ALL DEVICES ON A 24-HOUR BASIS.
16. THE CONTRACTOR SHALL INSTALL ALL TRAFFIC CONTROL DEVICES AND SHALL COORDINATE WITH RAILROAD OFFICIALS FOR TEMPORARY MODIFICATIONS OF GRADE XING EQUIPMENT NECESSARY TO MAINTAIN SAFE TRAFFIC OPERATIONS.

SEAL

REGISTERED PROFESSIONAL ENGINEER
ROBERT K. RICHARDSON
C 53589
Exp. 6-30-07
CIVIL
STATE OF CALIFORNIA

PREPARED BY

P&D Consultants, Inc.
999 Town & Country, Fourth Floor
Orange, CA 92868 (714) 835-4447

SIGNATURE — DATE 6/1/2004

REVISIONS			
MARK	DATE	DESCRIPTION	BY
△1	5/26/04	RIGHT TURN ONLY	RKR

SAN BERNARDINO COUNTY FLOOD CONTROL DISTRICT

SAN ANTONIO CREEK SYSTEM

STATE STREET

TRAFFIC CONTROL PLAN
CENTRAL AVENUE TO BENSON AVENUE
PHASE 1

PROJECT ENGR.	DRAWN BY:	DESIGNED BY:
RKR	PS	SDB

SUBMITTED BY: James Borcuts, CHIEF, ENGINEERING DIVISION — 4/5/04
RECOMMENDED BY: Daniel Ohm, ASSIST. FLOOD CONTROL ENGINEER — 4/5/04
APPROVED BY: Patricia D. Mead, FLOOD CONTROL ENGINEER — 4/6/04

DATE	SCALE	FILE NO.	DRWG. NO.
2/2004	1"=40'	1-112-	20 of 26

F:\PROJECTS\WSSD\PH-C2\MTRE_C2B.DWG, 6/1/2004 2:31:08 PM

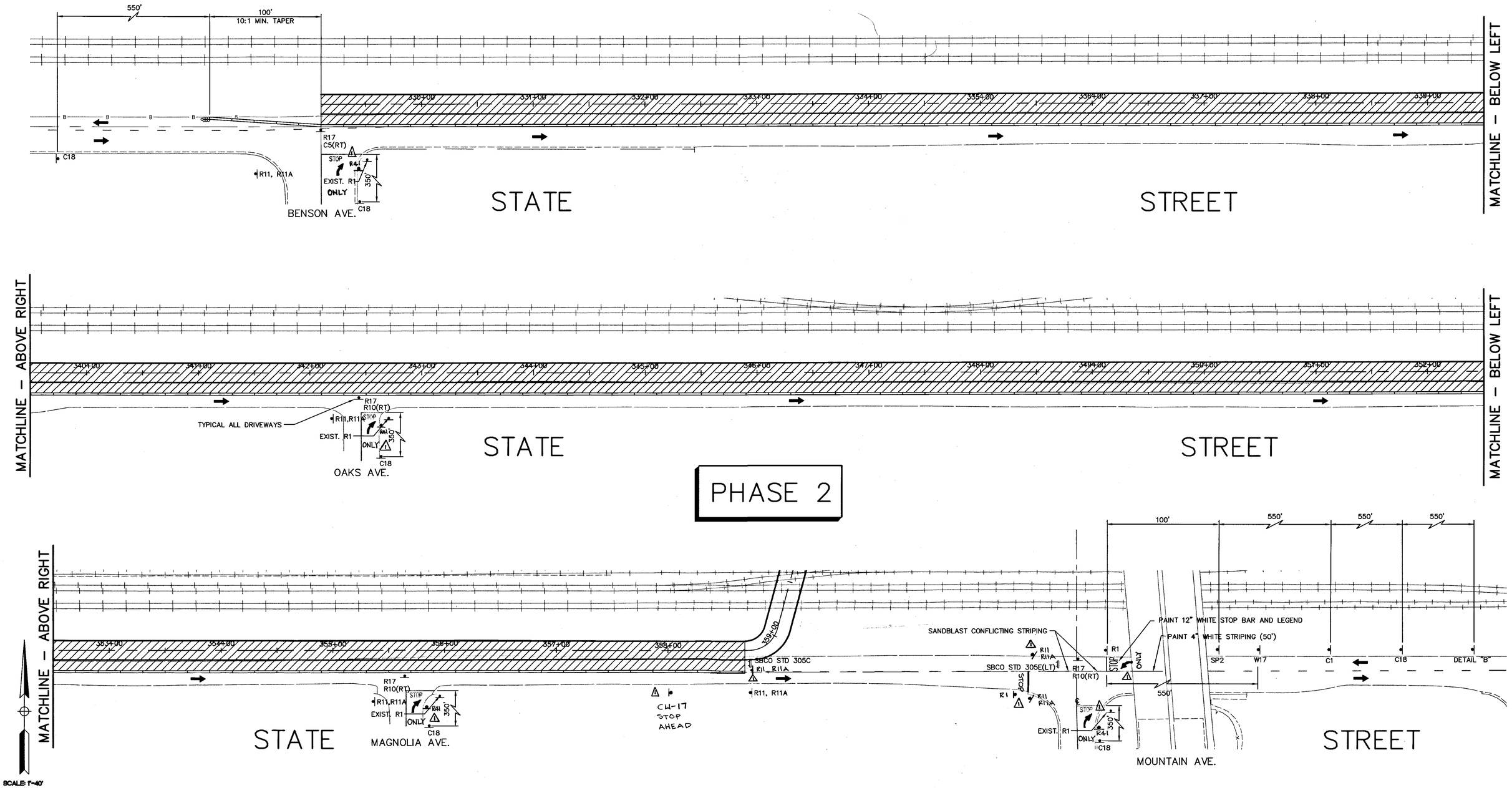

SEAL

REGISTERED PROFESSIONAL ENGINEER
SCOTT D. BARNHART
C 57117
Exp. 12-31-05
CIVIL
STATE OF CALIFORNIA

P&D Consultants, Inc.
999 Town & Country, Fourth Floor
Orange, CA 92868 (714) 835-4447

SIGNATURE: Scott D. Barnhart
DATE: 2/20/04

LEGEND

- TEMP. CRASH CUSHION (PER CALTRANS A81 ARRAY "D")
- TEMP. K-RAIL
- WORK AREA
- INSTALL SIGN AS NOTED
- DELINEATOR – SPACED AT 35' UNLESS OTHERWISE NOTED
- BARRICADE – TYPE III
- FLASHING ARROW SIGN
- DIRECTION OF TRAFFIC FLOW

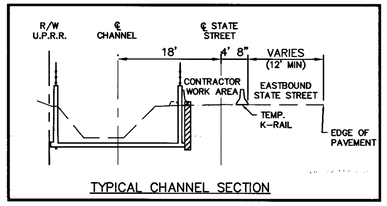

TYPICAL CHANNEL SECTION

STATE ST
CLOSED AT
MOUNTAIN AVE

DETAIL "B"
(BLACK ON ORANGE)

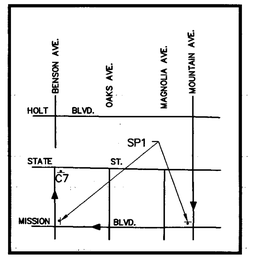

DETOUR SIGNING

REVISIONS			
MARK	DATE	DESCRIPTION	BY
△	5/18/04	TRAFFIC REVISIONS	A.G.

PROJECT ENGR.	DRAWN BY:	DESIGNED BY:
RKR	PS	SDB

SUBMITTED BY: 4/5/04 James Borcuk, CHIEF, ENGINEERING DIVISION
RECOMMENDED BY: Vance R. Alam 4/5/04, ASSIST. FLOOD CONTROL ENGINEER
APPROVED BY: 4/6/04 Patrick J. Mead, FLOOD CONTROL ENGINEER

SAN BERNARDINO COUNTY
FLOOD CONTROL DISTRICT

SAN ANTONIO CREEK SYSTEM

STATE STREET

TRAFFIC CONTROL PLAN
BENSON AVENUE TO
MOUNTAIN AVENUE
PHASE 2

DATE	SCALE	FILE NO.	DRWG. NO.
2/2004	1"=40'	1-112-	21 of 26

F:\PROJECTS\WSSD\PH-C2M\TRF_B2M.DWG, 2/27/2004 1:50:12 PM

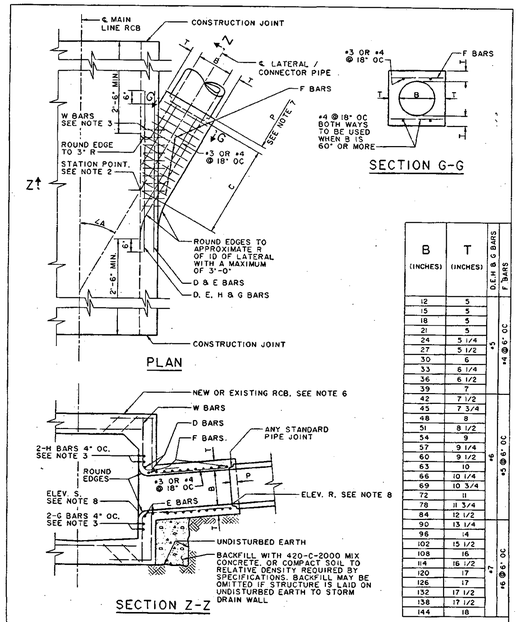

B (INCHES)	T (INCHES)	D,E,H & G BARS	F BARS
12	5	#5	#4 @ 6" OC
15	5		
18	5		
21	5		
24	5 1/4		
27	5 1/2		
30	6		
33	6 1/4		
36	6 1/2		
39	7	#6	#5 @ 6" OC
42	7 1/2		
45	7 3/4		
48	8		
51	8 1/2		
54	9		
57	9 1/4		
60	9 1/2		
63	10		
66	10 1/4		
69	10 3/4		
72	11		
78	11 3/4		
84	12 1/2	#7	#6 @ 6" OC
90	13 1/4		
96	14		
102	15 1/2		
108	16		
114	16 1/2		
120	17		
126	17		
132	17 1/2		
138	17 1/2		
144	18		

AMERICAN PUBLIC WORKS ASSOCIATION – SOUTHERN CALIFORNIA CHAPTER

PROMULGATED BY THE APWA-AGC JOINT COOPERATIVE COMMITTEE 1992

JUNCTION STRUCTURE – PIPE TO RCB

USE WITH STANDARD SPECIFICATIONS FOR PUBLIC WORKS CONSTRUCTION

STANDARD PLAN 333-0

SHEET 1 OF 2

NOTES

1. VALUES FOR A, B AND C SHALL BE SHOWN ON THE PROJECT DRAWINGS. ELEVATION R AND ELEVATION S SHALL BE SHOWN WHEN REQUIRED PER NOTE 8.
2. STATIONS SPECIFIED ON THE PROJECT DRAWINGS APPLY AT THE INTERSECTION OF CENTER LINES OF MAIN LINE AND LATERALS, EXCEPT THAT STATIONS FOR CATCH BASIN CONNECTOR PIPES APPLY AT INSIDE WALL OF STRUCTURE.
3. REINFORCING STEEL SHALL CONFORM TO ASTM A 615, GRADE 40, AND SHALL TERMINATE 1 1/2" CLEAR OF CONCRETE SURFACES UNLESS OTHERWISE SHOWN.
   a. W BARS ARE OF SIZE AND SPACING SPECIFIED FOR WALL STEEL ON PROJECT DRAWINGS, AND SHALL BE CUT IN CENTER OF OPENING AND BENT INTO TOP AND BOTTOM OF JUNCTION STRUCTURE.
   b. OMIT H BARS WHEN SOFFIT OF SPUR IS 12" OR LESS BELOW SOFFIT OF MAIN LINE, AND OMIT G BARS WHEN INVERT OF SPUR IS 12" OR LESS ABOVE FLOOR OF MAIN LINE.
4. JUNCTION STRUCTURE SHALL BE POURED MONOLITHICALLY WITH MAIN LINE, MANHOLE OR TRANSITION STRUCTURE.
5. FLOOR OF STRUCTURE SHALL BE STEEL-TROWELED TO THE SPRING LINE.
6. WHEN CONNECTING TO EXISTING RCB, BREAKOUT LIMITS AND DETAILS SHALL BE SHOWN ON THE PROJECT DRAWINGS.
7. EMBEDMENT, P, SHALL BE 5" FOR B = 96" OR LESS AND 8" FOR B OVER 96".
8. IF ELEVATION R AND ELEVATION S ARE NOT SHOWN ON THE PROJECT DRAWINGS THEN THE INLET OPENING SHALL FALL 6" BELOW THE SOFFIT OF THE MAIN LINE WITH THE INLET PIPE LAID ON A STRAIGHT GRADE FROM MAIN LINE TO CATCH BASIN OR TO GRADE BREAK IN INLET LINE. ELEVATION S SHALL BE SHOWN ON THE PROJECT DRAWINGS IF THE INLET OPENING FALLS MORE THAN 6" BELOW THE SOFFIT OF THE MAIN LINE WITH THE INLET PIPE LAID ON A STRAIGHT GRADE AS STATED ABOVE.
   ELEVATION R SHALL BE SHOWN ON THE PROJECT DRAWINGS ONLY WHEN A STUB IS TO BE PROVIDED FOR A FUTURE CONNECTION.
9. LATERALS OR CONNECTOR PIPES 24" OR LESS IN DIAMETER SHALL BE NO MORE THAN 5" ABOVE THE INVERT. LATERALS OR CONNECTOR PIPES 27" OR LARGER IN DIAMETER SHALL BE NO MORE THAN 18" ABOVE THE INVERT, WITH THE EXCEPTION THAT CATCH BASIN CONNECTOR PIPES LESS THAN 50" IN LENGTH SHALL NOT BE MORE THAN 5" ABOVE THE INVERT.
10. THE NEED FOR AN EDGE BEAM AND/OR ADDITIONAL REINFORCEMENT SHALL BE INVESTIGATED BY THE ENGINEER FOR ANY ONE OF THE FOLLOWING CONDITIONS:
    a. ANGLE A IS LESS THAN 30°
    b. TOP OF INLET PIPE IS LESS THAN 6" BELOW THE SOFFIT
    c. FLOW LINE OF INLET PIPE IS LESS THAN 7" ABOVE THE FLOOR OF THE RCB AT THE INSIDE FACE

AMERICAN PUBLIC WORKS ASSOCIATION – SOUTHERN CALIFORNIA CHAPTER

JUNCTION STRUCTURE — PIPE TO RCB

STANDARD PLAN 333-0

SHEET 2 OF 2

CONSTRUCTION NOTES

(11) CONSTRUCT CONCRETE BARRIER TYPE 50D PER STATE STD PLAN A75A.

(14) CONSTRUCT RECESS LADDER PER DETAILS ON SHT. 23

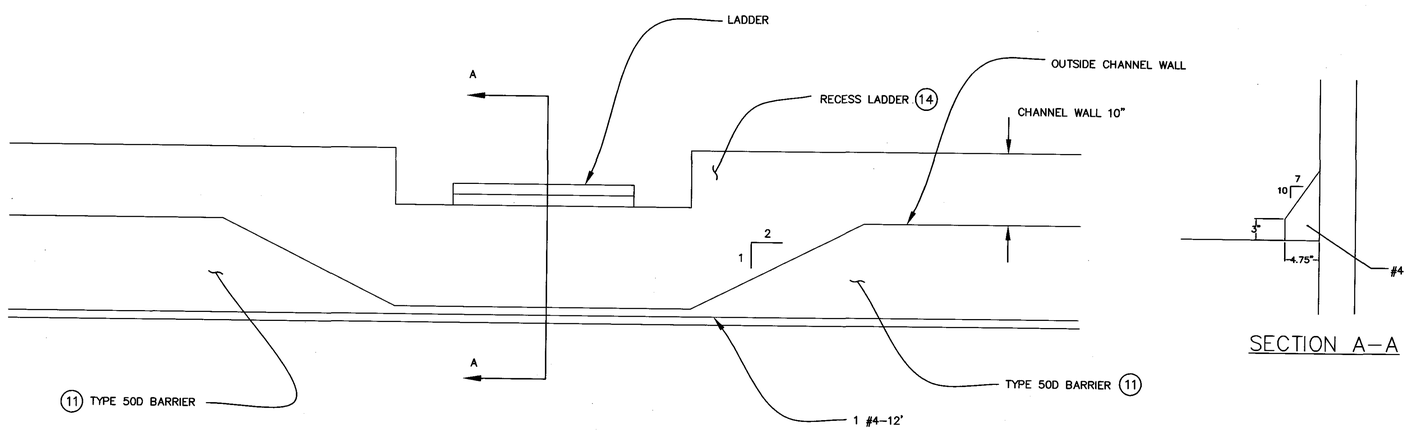

MODIFIED BARRIER DETAIL

PLAN VIEW SCALE: 1"=10'-0"

SEAL

REGISTERED PROFESSIONAL ENGINEER RONALD K. RICHARDSON C 53589 Exp. 6-30-07 CIVIL STATE OF CALIFORNIA

PREPARED BY

P&D Consultants
999 Town & Country, Fourth Floor
Orange, CA 92868 (714) 835-4447

SIGNATURE Ronald K Richardson DATE 2/27/2004

REVISIONS			
MARK	DATE	DESCRIPTION	BY

PROJECT ENGR. RKR | DRAWN BY: RKR | DESIGNED BY: RKR

SUBMITTED BY: James Borcuk 4/5/04 CHIEF, ENGINEERING DIVISION

RECOMMENDED BY: Donald Olson 4/6/04 ASSIST. FLOOD CONTROL ENGINEER

APPROVED BY: Patrick J Mead 4/6/04 FLOOD CONTROL ENGINEER

SAN BERNARDINO COUNTY FLOOD CONTROL DISTRICT

WEST STATE STREET STORM DRAIN

STANDARD DETAILS

DATE	SCALE	FILE NO.	DRWG. NO.
02/2004	1"=10'	1-112-	22 of 26

F:\PROJECTS\WSSD\PH-C2\MISTDPLN.DWG, 2/27/2004 10:10:37 AM

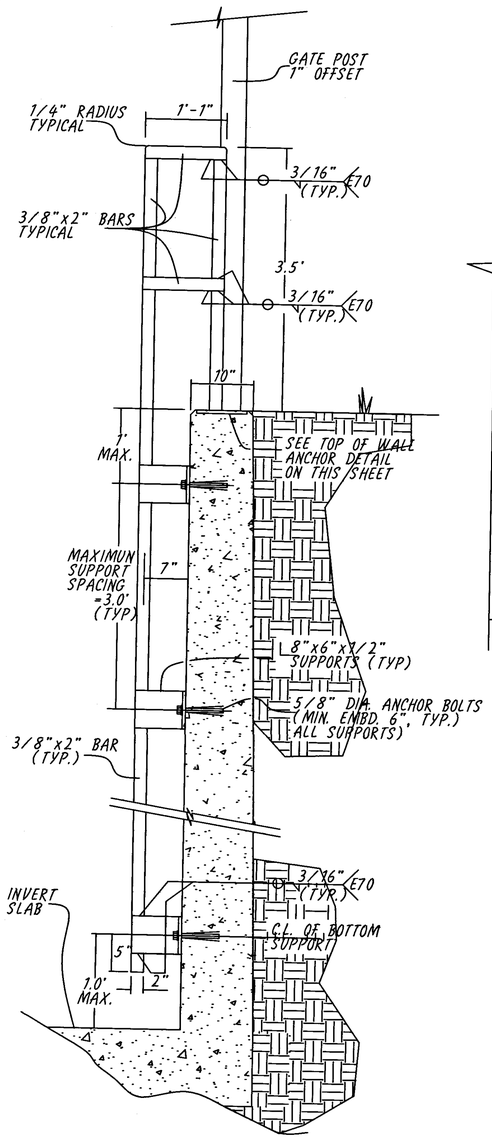

SIDE VIEW DETAIL

NOT TO SCALE

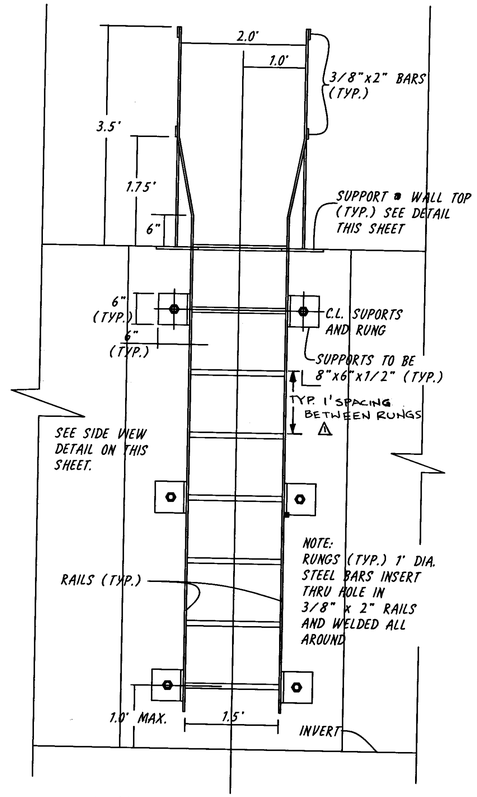

INVERT ACCESS LADDER

ELEVATION VIEW

NOT TO SCALE

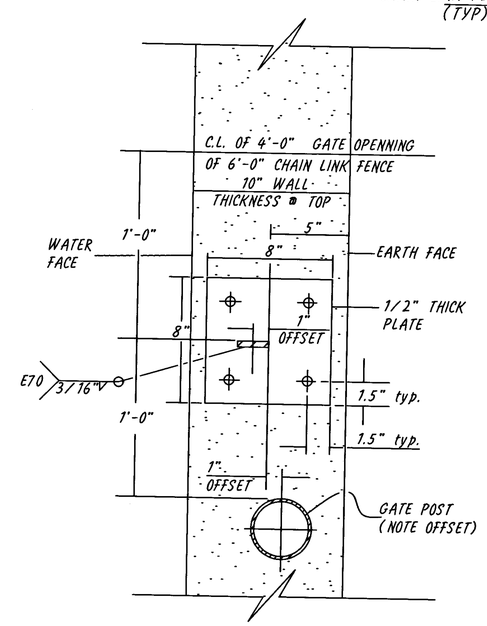

WALL SUPPORT

PLAN VIEW

NOT TO SCALE

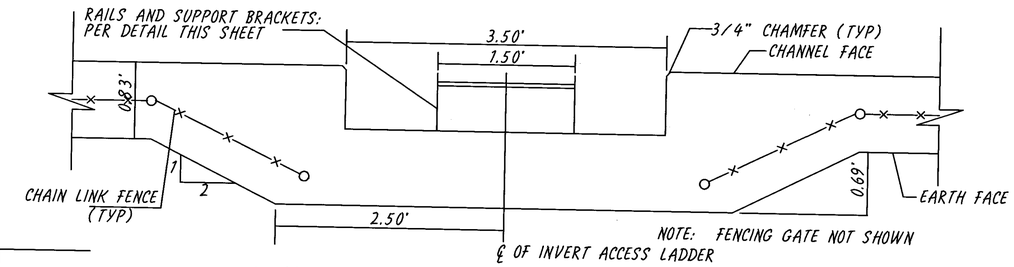

INVERT ACCESS LADDER DETAILS

PLAN VIEW

NOT TO SCALE

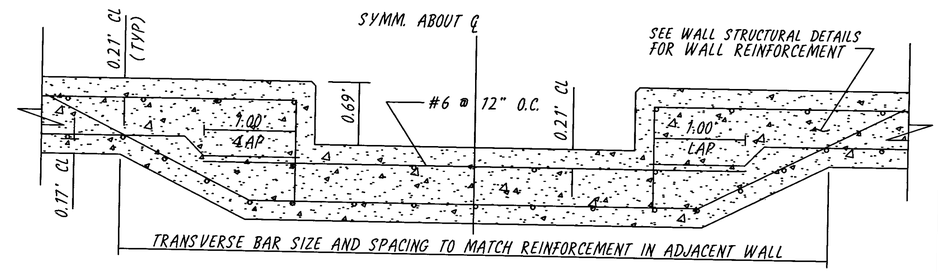

REINFORCEMENT DETAIL

NOT TO SCALE

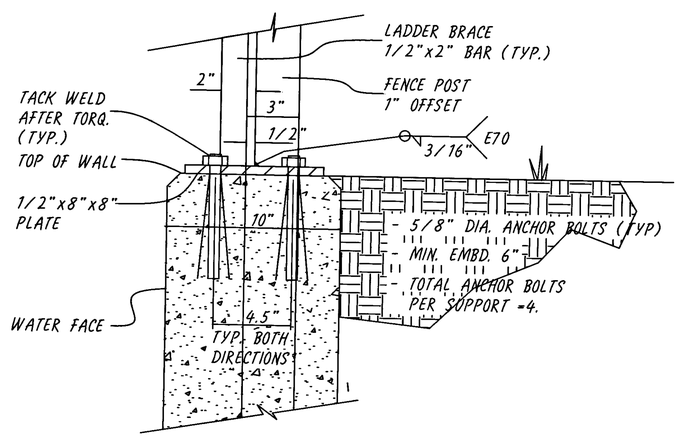

ALTERNATE

WALL ANCHOR DETAIL

NOT TO SCALE

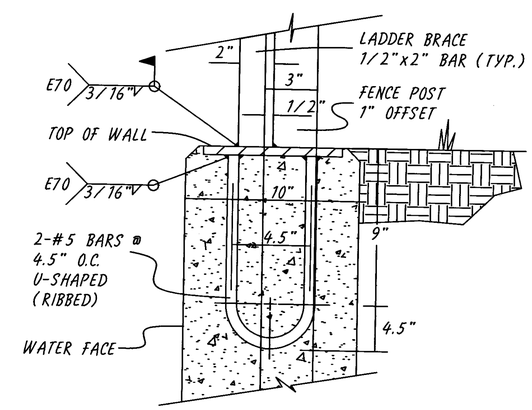

WALL ANCHOR DETAIL

NOT TO SCALE

NOTES PERTAINING TO LADDER:

ALL STEEL MEMBERS SHALL BE A-36 STEEL OR STRONGER AFTER TORQUING ANCHOR BOLTS, TACK WELD BOLTS TO PLATES AND ANGLES. ALL STEEL SURFACE SHALL BE GRINDED SMOOTH. ALL STEEL MEMBERS SHALL BE GALVANIZED AFTER FABRICATION. BOTTOM SUPPORT TO BE LOCATED AT A MAXIMUM OF 1'-0" FROM CHANNEL INVERT.

REGISTERED PROFESSIONAL ENGINEER RICHARD K. RICHARDSON C 53589 Exp. 6-30-07 CIVIL STATE OF CALIFORNIA

RESERVED FOR ENGINEER'S SEAL

SAN BERNARDINO COUNTY FLOOD CONTROL DISTRICT 1939 CALIFORNIA

REVISIONS

MARK	DATE	DESCRIPTION	BY:
1	5/18/04	ADDED DIMENSION	A.G.

SUBMITTED BY: James Brecik 4/6/04 CHIEF, ENGINEERING DIVISION Date

RECOMMENDED BY: Frank R. Dean 4/6/04 ASSIST. FLOOD CONTROL ENGINEER Date

APPROVED BY: Patrick J. Mead 4/6/04 FLOOD CONTROL ENGINEER Date

PROJ. ENG.	DES. BY:	REV'D BY:	DRAWN BY:
RKR	--	--	--

SAN BERNARDINO COUNTY FLOOD CONTROL DISTRICT

SAN ANTONIO CREEK SYSTEM

WEST STATE STREET CHANNEL

RECESS LADDER DETAILS

DATE 02/2004

F.B. REF.

FILE NO.

DRWG. NO. 23 OF 26

/username/projects/project name/filename.pro filename.plt (view #) plot Apr 21 11:08:05 1997

F:\PROJECTS\WSSD\PH-C2\MRECLAD.DWG, 2/27/2004 2:32:52 PM

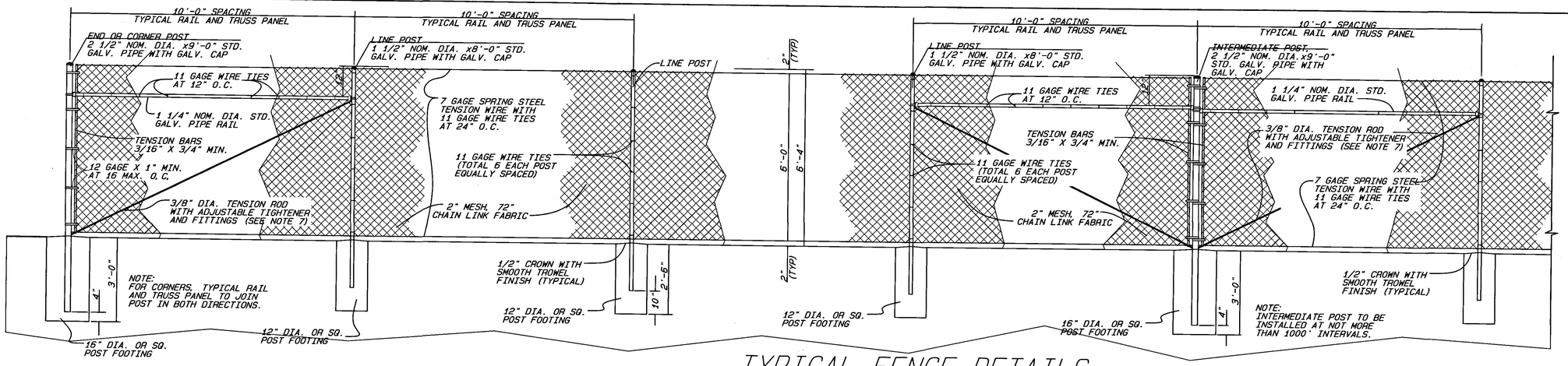

TYPICAL FENCE DETAILS

SCALE 1" = 2'

PIPE MATERIAL LIST

Nominal Diameter (Inches)	Outside Diameter (Inches)	Inside Diameter (Inches)	Weight per Foot Lbs.
1 1/4	1.660	1.380	2.270
1 1/2	1.900	1.610	2.720
2	2.375	2.067	3.650
2 1/2	2.875	2.469	5.790
3	3.500	3.068	7.580
3 1/2	4.000	3.548	9.110
4	4.500	4.026	10.790
6	6.625	6.065	18.970
8	8.625	7.981	28.55

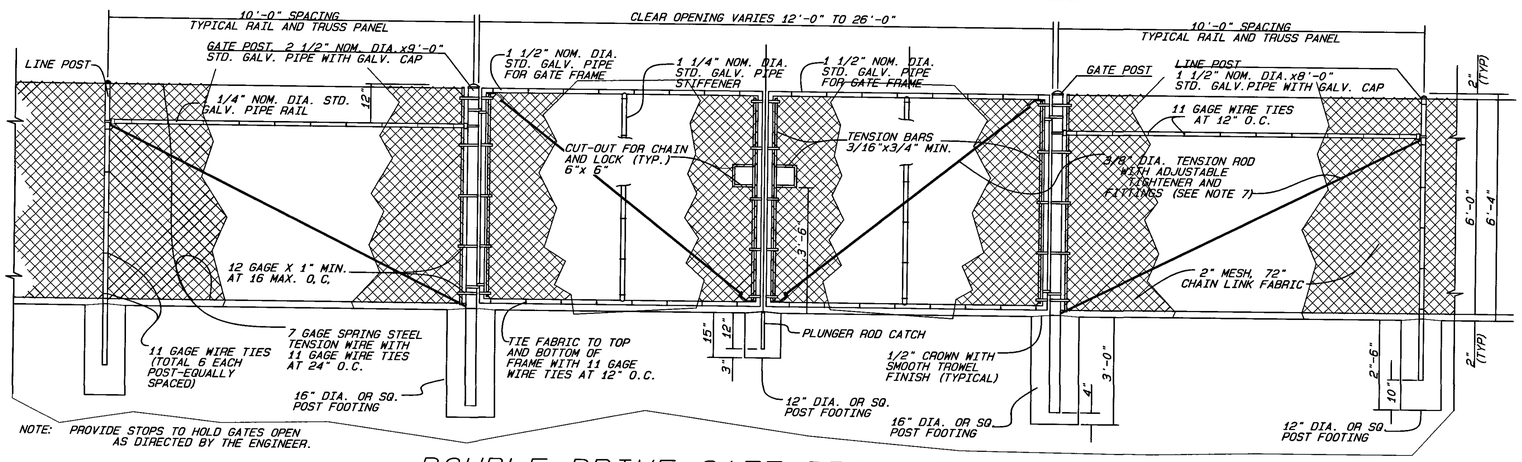

DOUBLE DRIVE GATE DETAILS

SCALE 1" = 2'

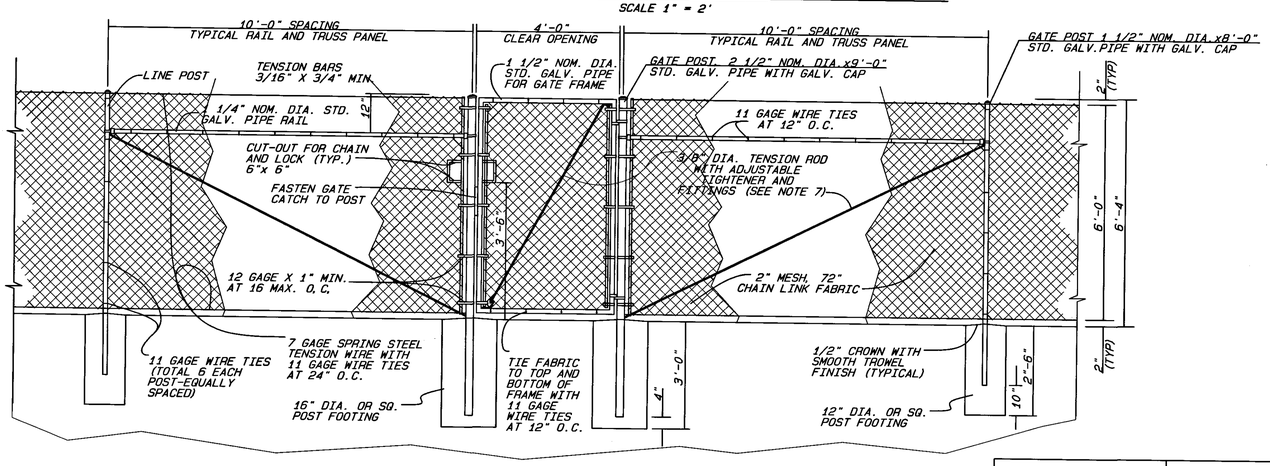

WALK GATE DETAILS

SCALE 1" = 2'

GENERAL NOTES

1. ALL CHAIN LINK FENCE MATERIALS, FITTINGS AND INSTALLATION SHALL CONFORM TO THE LATEST EDITION OF THE DEPARTMENT OF TRANSPORTATION STANDARD SPECIFICATIONS, SECTION 80, "FENCES" AND THIS SPECIAL DRAWING.
2. THE FENCE FABRIC SHALL BE PLACED ON THE OUTWARD FACING SIDE OF THE POSTS, STRECHED TAUT, AND SECURELY FASTENED, UNLESS OTHERWISE SHOWN ON THE PLANS.
3. CLEARANCE BETWEEN RIGHT-OF-WAY AND FENCE FABRIC SHALL BE 6" UNLESS OTHERWISE SHOWN ON THE PLANS.
4. ALL GATES SHALL OPEN INWARD, EXCEPT IF OTHERWISE NOTED IN THE SPECIAL PROVISIONS.
5. ALL CHAIN LINK FENCE MATERIALS, FITTINGS AND INSTALLATION SHALL CONFORM TO THE LATEST EDITION OF THE DEPARTMENT OF TRANSPORTATION STANDARD SPECIFICATIONS, SECTION 80, "FENCES" AND THIS SPECIAL DRAWING.
6. SECURE GALVANIZED CAP TO POST WITH 1/4" GALVANIZED ROUND HEAD RIVET, OR TACK WELD.
7. ADJUSTABLE TIGHTENER SHALL BE TURNBUCKLE OR EQUIVALENT, HAVING A 6" MINIMUM TAKEUP.
8. DIAMETER SIZE OF LINE, INTERMEDIATE, CORNER, END AND GATE POSTS TO BE AS SHOWN ON THIS SPECIAL DRAWING.
9. ALL BOLTED HARDWARE ITEMS SHALL ALSO BE TACK WELDED IN SUCH A MANNER AS TO PREVENT REMOVAL BY UNAUTHORIZED INDIVIDUALS.
10. ALL FENCE FABRIC SHALL HAVE A 12", WIDE HORIZONTALLY PAINTED STRIPE ALONG THE CENTER OF THE FABRIC. THE PAINT SHALL BE A REFLECTIVE TYPE ORANGE OR APPROVED EQUAL. AFTER FENCE FABRIC HAS BEEN PAINTED, A SAMPLE OF SAID PAINT SHALL BE GIVEN TO THE SAN BERNARDINO COUNTY FLOOD CONTROL DISTRICT, OPERATIONS DIVISION, ALONG WITH MANUFACTURER'S NAME AND PAINT SPECIFICATIONS.
11. THE FENCE FABRIC SHALL BE 9-GAGE UNLESS OTHERWISE SPECIFIED.

REGISTERED PROFESSIONAL ENGINEER RONALD K. RICHARDSON C 53589 Exp. 6-30-07 CIVIL STATE OF CALIFORNIA

RESERVED FOR ENGINEER'S SEAL

SAN BERNARDINO COUNTY FLOOD CONTROL DISTRICT 1939

REVISIONS			
MARK	DATE	DESCRIPTION	BY:

SUBMITTED BY: James Bourque 4/1/04 — CHIEF, ENGINEERING DIVISION, Date

RECOMMENDED BY: Vance R. Olson 4/5/04 — ASSIST. FLOOD CONTROL ENGINEER, Date

APPROVED BY: Patrick J. Mead 4/6/04 — FLOOD CONTROL ENGINEER, Date

PROJ. ENG.	DES. BY:	REV'D BY:	DRAWN BY:
R.K.R.	A.H.		M.J.R.

SAN BERNARDINO COUNTY
FLOOD CONTROL DISTRICT

YUCCA VALLEY SYSTEM

BOUNDARY FENCING

SPEC. DRWG. I

6' CHAIN LINK FENCE
(TYPE CL-6 = 72" FABRIC)

DATE	F.B. REF.	FILE NO.	DRWG. NO.
2/2004			24 of 26

F:\PROJECTS\WSSD\FH-C2M\fencestds1.dwg, 2/27/2004 3:08:28 PM

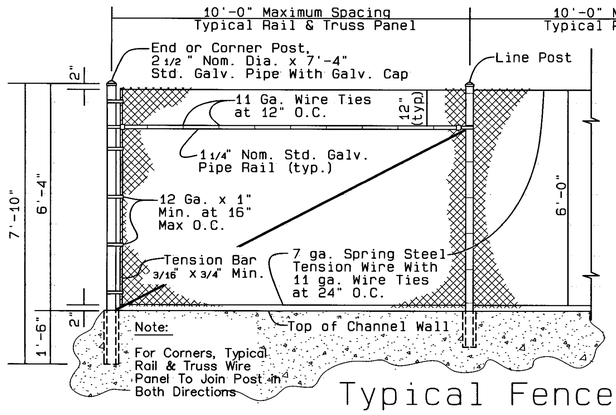

Typical Fence Elevation

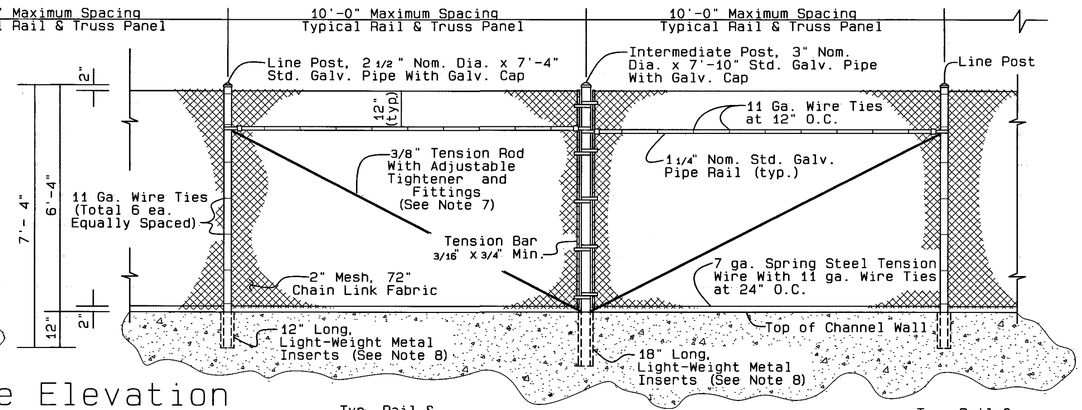

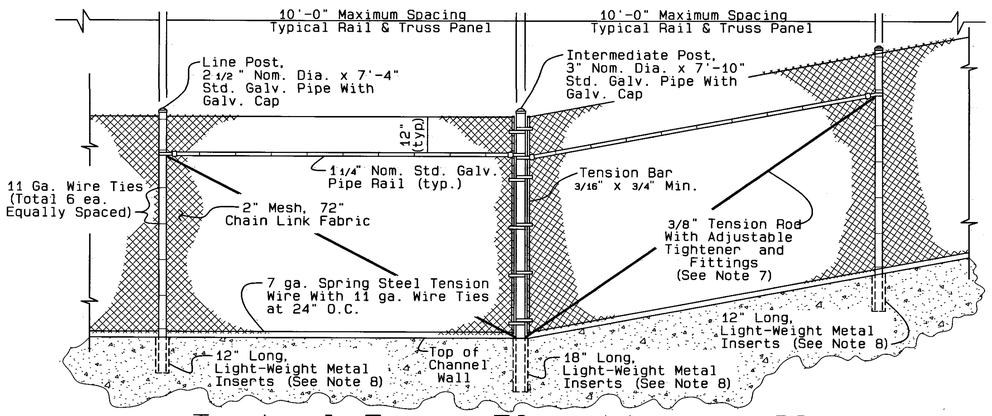

Typical Fence Elevation on Slope

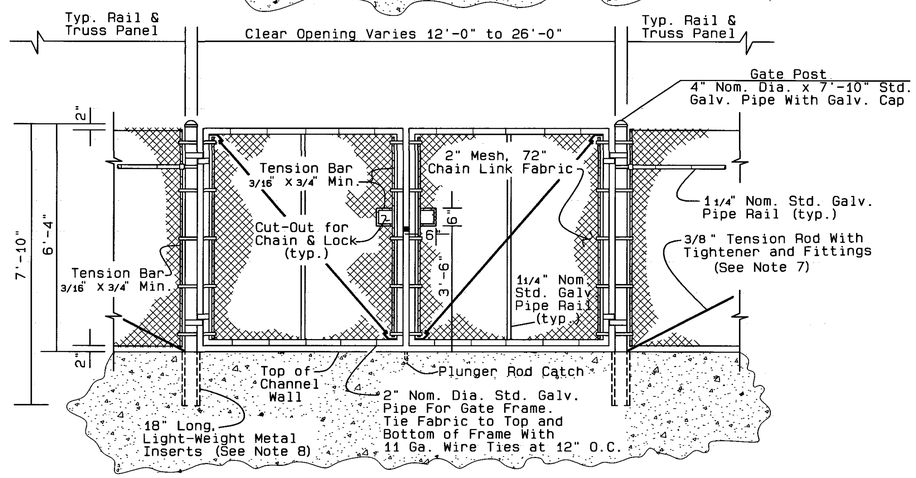

Typical Double Drive Gate

SCALE: 1" = 2'

PIPE MATERIAL LIST

Nominal Diameter (Inches)	Outside Diameter (Inches)	Inside Diameter (Inches)	Weight per Foot Lbs.
1 1/4	1.660	1.380	2.270
1 1/2	1.900	1.610	2.720
2	2.375	2.067	3.650
2 1/2	2.875	2.469	5.790
3	3.500	3.068	7.580
3 1/2	4.000	3.548	9.110
4	4.500	4.026	10.790
6	6.625	6.065	18.970
8	8.625	7.981	28.55

GENERAL NOTES

1. ALL CHAIN LINK FENCE MATERIALS, FITTINGS AND INSTALLATION SHALL CONFORM TO THE LATEST EDITION OF THE DEPARTMENT OF TRANSPORTATION STANDARD SPECIFICATIONS, SECTION 80, "FENCES" AND THIS SPECIAL DRAWING.
2. THE FENCE FABRIC SHALL BE PLACED ON THE OUTWARD FACING SIDE OF THE POSTS, STRECHED TAUT, AND SECURELY FASTENED, UNLESS OTHERWISE SHOWN ON THE PLANS.
3. THE FENCE FABRIC SHALL BE 9 GAUGE UNLESS OTHERWISE SPECIFIED.
4. ALL GATES SHALL OPEN INWARD, EXCEPT IF OTHERWISE NOTED IN THE SPECIAL PROVISIONS.
5. ALL GATE HINGES SHALL BE HEAVY DUTY MALLEABLE IRON OR STEEL, INDUSTRIAL SERVICE TYPE 270 DEGREE SWING, NON-REMOVABLE, OF APPROVED QUALITY AND DESIGN, AND SHALL BE FASTENED FROM THE INSIDE.
6. SECURE GALVANIZED CAP TO POST WITH 1/4" GALVANIZED ROUND HEAD RIVET, OR TACK WELD.
7. ADJUSTABLE TIGHTENER SHALL BE TURNBUCKLE OR EQUIVALENT, HAVING A 6" MINIMUM TAKEUP.
8. LIGHT-WEIGHT METAL INSERTS SHALL BE SHEET METAL TUBES WITH I.D. 3/4" GREATER THAN O.D. OF PIPE USED. POSTS ARE TO BE GROUTED INTO INSERTS USING NEAT GROUT OF 1 PART OF CEMENT AND 2 PARTS OF WATER.
9. ALL BOLTED HARDWARE ITEMS SHALL ALSO BE TACK WELDED IN SUCH A MANNER AS TO PREVENT REMOVAL BY UNAUTHORIZED INDIVIDUALS.
10. ALL FENCE FABRIC SHALL HAVE A 12", WIDE HORIZONTALLY PAINTED STRIPE ALONG THE CENTER OF THE FABRIC. THE PAINT SHALL BE A REFLECTIVE TYPE ORANGE OR APPROVED EQUAL. AFTER FENCE FABRIC HAS BEEN PAINTED, A SAMPLE OF SAID PAINT SHALL BE GIVEN TO THE SAN BERNARDINO COUNTY FLOOD CONTROL DISTRICT, OPERATIONS DIVISION, ALONG WITH MANUFACTURER'S NAME AND PAINT SPECIFICATIONS.
11. FOR WALL THICKNESSES 12" OR GREATER, USE POST SIZES AS SHOWN. FOR WALL THICKNESS LESS THAN 12", USE POST SIZES AS FOLLOWS:
END, CORNER, INTERMEDIATE, HEADWALL, PARAPET & WALK GATE POSTS - 2 1/2" NOM. DIA.
LINE POSTS - 2" NOM.DIA.
DOUBLE DRIVE GATE POSTS - 3" NOM. DIA.

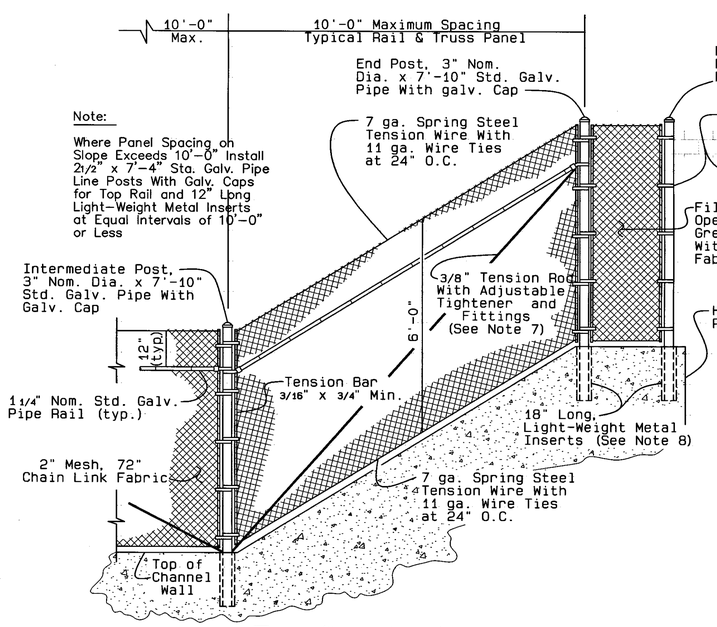

Typical Fence Elevation at Headwall
(Includes RCB Parapets)

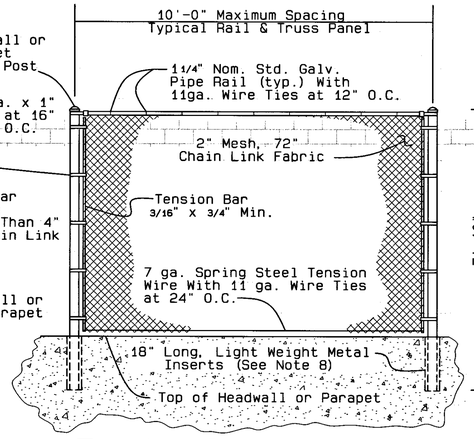

Typical Head Wall
Fence Elevation
(Includes RCB Parapets)

Note:
Where Spacing Exceeds 10'-0" Install 2 1/2" x 7'-4" Sta. Galv. Pipe Line Posts With Galv. Eye Type Caps for Top Rail and 12" Long Light Weight Metal Inserts at Equal Intervals of 10'-0" or Less

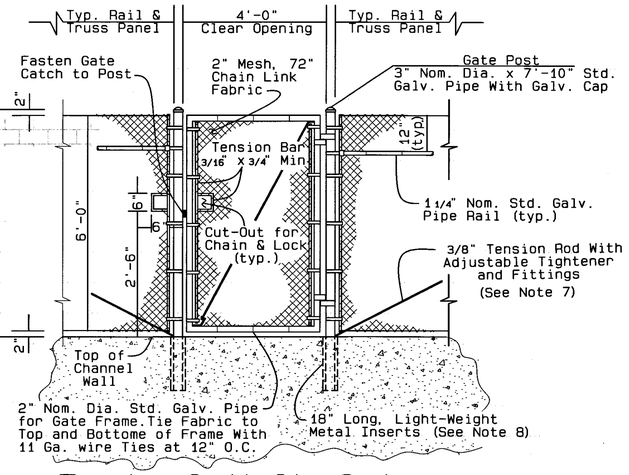

Typical Walk Gate

RESERVED FOR ENGINEER'S SEAL

REGISTERED PROFESSIONAL ENGINEER RONALD K. RICHARDSON C 53589 Exp. 6-30-07 CIVIL STATE OF CALIFORNIA

SAN BERNARDINO COUNTY FLOOD CONTROL DISTRICT 1939 CALIFORNIA

REVISIONS			
MARK	DATE	DESCRIPTION	BY:

SUBMITTED BY: James Brenk, CHIEF, ENGINEERING DIVISION — 4/1/04 Date
RECOMMENDED BY: Dana R. Olsen, ASSIST. FLOOD CONTROL ENGINEER — 4/5/04 Date
APPROVED BY: Patrick J. Mead, FLOOD CONTROL ENGINEER — 4/6/04 Date

PROJ. ENG.	DES. BY	REV'D. BY	DRAWN BY
R.K.R.	A.H.		M.J.R.

SAN BERNARDINO COUNTY
FLOOD CONTROL DISTRICT

CHANNEL WALL FENCING
SPEC. DRWG. II
6' CHAIN LINK FENCE
(TYPE CL-6 = 72" FABRIC)

DATE 8/04/99
F.B. REF.
FILE NO.
DRWG. NO. 25 of 26

F:\PROJECTS\WSSD\PH-C2\fdfencesd2.dwg, 2/27/2004 8:57:13 AM

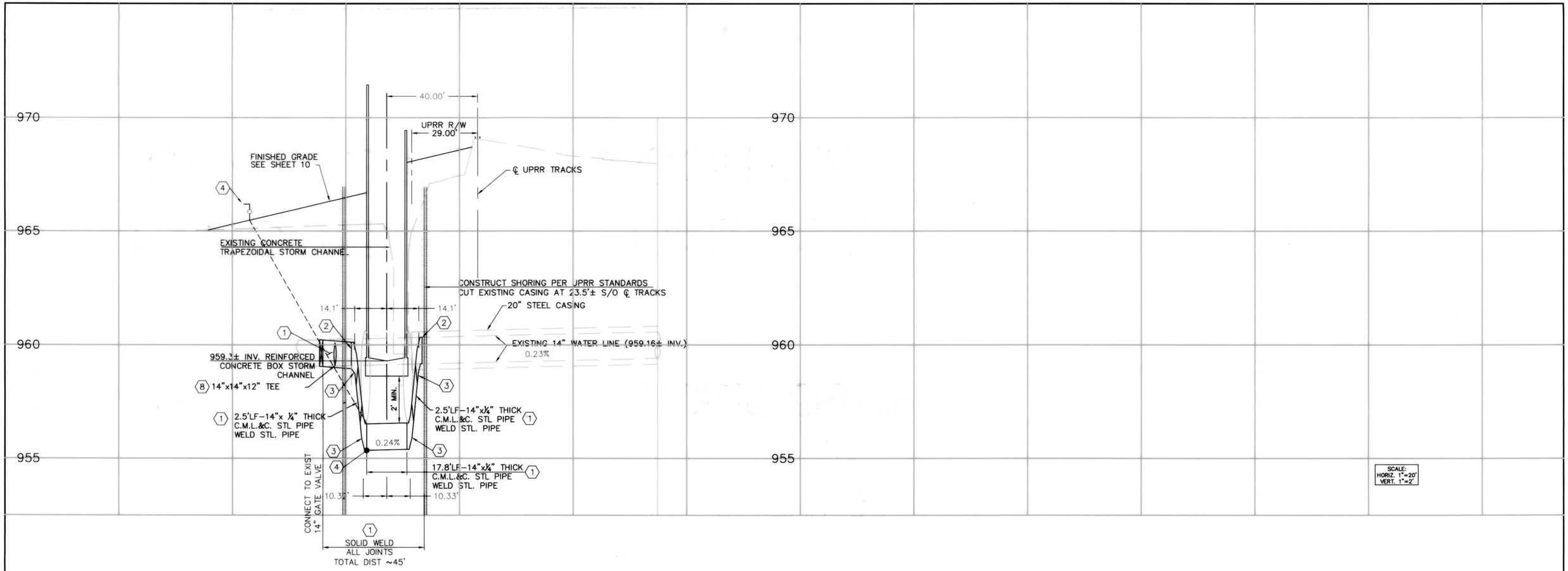

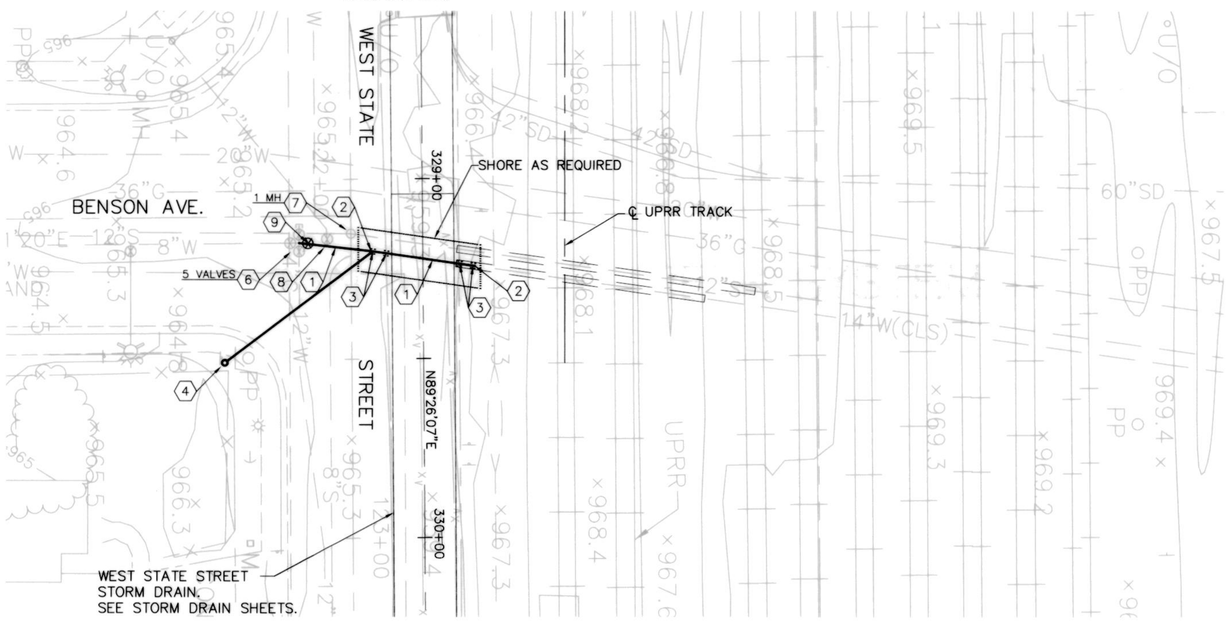

SCALE: 1"=20'

CONSTRUCTION NOTES

1. CONSTRUCT 14" x ¼" THICK WALL PIPE (CML&C) SOLID WELD JOINTS PER CITY OF ONTARIO STD DWG 406.
2. CONSTRUCT 14" BUTTSTRAP PER CITY OF ONTARIO STD DWG 406.
3. CONSTRUCT 14" x 45° WELD STL. ELBOW CML&C PER CITY OF ONTARIO STD DWG 406.
4. CONSTRUCT 6" BLOW-OFF ASSEMBLY PER CITY OF ONTARIO STD DWG 416.
6. RAISE ALL VALVES TO FINISHED GRADE PER CITY OF ONTARIO STD DWG 431.
7. RAISE ALL MANHOLES TO FINISHED GRADE PER CITY OF ONTARIO STD DWG 201.
8. CONSTRUCT 14"X14"X12" TEE WELD STL. CML&C PER CITY OF ONTARIO STD DWG 406.
9. CONSTRUCT 14" GATE VALVE WITH BLIND FLANGE PER CITY OF ONTARIO STD DWG 428.

NOTES:

1. CONSTUCT ALL PIPE PER CITY OF ONTARIO STD DWG 406.
2. CONTRACTOR SHALL SCHEDULE WITH CITY OF ONTARIO AND CHINO PRIOR TO START OF WATER RELOCATION

SEAL

REGISTERED PROFESSIONAL ENGINEER
RONALD K. RICHARDSON
C 53589
Exp. 6-30-07
CIVIL
STATE OF CALIFORNIA

PREPARED BY

P&D Consultants, Inc.
999 Town & Country, Fourth Floor
Orange, CA 92868 (714) 835-4447

SIGNATURE 3/31/2004 DATE

CITY OF ONTARIO

RECOMMENDED BY — ASSISTANT CITY ENGINEER — DATE 8-19-04

ACCEPTED BY — CITY ENGINEER — DATE 8-23-04

REVISIONS			
MARK	DATE	DESCRIPTION	BY

PROJECT ENGR.	DRAWN BY:	DESIGNED BY:
RKR	DY	KCB

SUBMITTED BY: 4/5/04 — CHIEF, ENGINEERING DIVISION

RECOMMENDED BY: 4/5/04 — ASSIST. FLOOD CONTROL ENGINEER

APPROVED BY: 4/6/04 — FLOOD CONTROL ENGINEER

SAN BERNARDINO COUNTY FLOOD CONTROL DISTRICT

SAN ANTONIO CREEK SYSTEM

14" ONTARIO WATER LINE RELOCATION AT WEST STATE ST. & BENSON AVE.

DATE	SCALE	FILE NO.	DRWG. NO.
3/2004	1"=20'	1-112-	26 of 26

03/31/04 10:58 F:\PROJECTS\WSSD\WaterRelocations\WR-6.dwg
F:\PROJECTS\WSSD\WaterRelocations\WR-6.dwg, 3/31/2004 10:58:53 AM